Buck/Boost Converter PICtail™ Plus Daughter Board User's Guide

© 2008 Microchip Technology Inc.

Note the following details of the code protection feature on Microchip devices:

- Microchip products meet the specification contained in their particular Microchip Data Sheet.
- Microchip believes that its family of products is one of the most secure families of its kind on the market today, when used in the intended manner and under normal conditions.
- There are dishonest and possibly illegal methods used to breach the code protection feature. All of these methods, to our knowledge, require using the Microchip products in a manner outside the operating specifications contained in Microchip's Data Sheets. Most likely, the person doing so is engaged in theft of intellectual property.
- Microchip is willing to work with the customer who is concerned about the integrity of their code.
- Neither Microchip nor any other semiconductor manufacturer can guarantee the security of their code. Code protection does not mean that we are guaranteeing the product as "unbreakable."

Code protection is constantly evolving. We at Microchip are committed to continuously improving the code protection features of our products. Attempts to break Microchip's code protection feature may be a violation of the Digital Millennium Copyright Act. If such acts allow unauthorized access to your software or other copyrighted work, you may have a right to sue for relief under that Act.

Information contained in this publication regarding device applications and the like is provided only for your convenience and may be superseded by updates. It is your responsibility to ensure that your application meets with your specifications. MICROCHIP MAKES NO REPRESENTATIONS OR WARRANTIES OF ANY KIND WHETHER EXPRESS OR IMPLIED, WRITTEN OR ORAL, STATUTORY OR OTHERWISE, RELATED TO THE INFORMATION, INCLUDING BUT NOT LIMITED TO ITS CONDITION, QUALITY, PERFORMANCE, MERCHANTABILITY OR FITNESS FOR PURPOSE**.** Microchip disclaims all liability arising from this information and its use. Use of Microchip devices in life support and/or safety applications is entirely at the buyer's risk, and the buyer agrees to defend, indemnify and hold harmless Microchip from any and all damages, claims, suits, or expenses resulting from such use. No licenses are conveyed, implicitly or otherwise, under any Microchip intellectual property rights.

Trademarks

The Microchip name and logo, the Microchip logo, Accuron, dsPIC, KEELOQ, KEELOQ logo, MPLAB, PIC, PICmicro, PICSTART, rfPIC and SmartShunt are registered trademarks of Microchip Technology Incorporated in the U.S.A. and other countries.

FilterLab, Linear Active Thermistor, MXDEV, MXLAB, SEEVAL, SmartSensor and The Embedded Control Solutions Company are registered trademarks of Microchip Technology Incorporated in the U.S.A.

Analog-for-the-Digital Age, Application Maestro, CodeGuard, dsPICDEM, dsPICDEM.net, dsPICworks, dsSPEAK, ECAN, ECONOMONITOR, FanSense, In-Circuit Serial Programming, ICSP, ICEPIC, Mindi, MiWi, MPASM, MPLAB Certified logo, MPLIB, MPLINK, mTouch, PICkit, PICDEM, PICDEM.net, PICtail, PIC^{32} logo, PowerCal, PowerInfo, PowerMate, PowerTool, REAL ICE, rfLAB, Select Mode, Total Endurance, UNI/O, WiperLock and ZENA are trademarks of Microchip Technology Incorporated in the U.S.A. and other countries.

SQTP is a service mark of Microchip Technology Incorporated in the U.S.A.

All other trademarks mentioned herein are property of their respective companies.

© 2008, Microchip Technology Incorporated, Printed in the U.S.A., All Rights Reserved.

Printed on recycled paper.

QUALITY MANAGEMENT SYSTEM
CERTIFIED BY DNV
ISO/TS 16949:2002

Microchip received ISO/TS-16949:2002 certification for its worldwide headquarters, design and wafer fabrication facilities in Chandler and Tempe, Arizona; Gresham, Oregon and design centers in California and India. The Company's quality system processes and procedures are for its PIC® MCUs and dsPIC® DSCs, KEELOQ® code hopping devices, Serial EEPROMs, microperipherals, nonvolatile memory and analog products. In addition, Microchip's quality system for the design and manufacture of development systems is ISO 9001:2000 certified.

Table of Contents

Preface **1**

Chapter 1. Introduction

1.1 Overview 7
1.2 Features 11
1.3 Product Package 11

Chapter 2. Hardware Overview

2.1 Daughter Board Connectors 13
2.2 Daughter Board User Hardware Interface 15
2.3 Using the Daughter Board with the Explorer 16 Development Board 20
2.4 Using the Daughter Board with the 16-bit 28-pin Starter Development Board 21
2.5 Power Rating of Converter Stage 24

Chapter 3. Getting Started

3.1 Overview 25
3.2 Creating the Project 26
3.3 Building the Code 34
3.4 Programming the Device 38
3.5 Debugging the Code 44

Chapter 4. Demonstration Program Operation

4.1 Program Demonstration 49
4.2 Code Demonstration 51
4.3 Other Code Examples 51

Index **59**

Worldwide Sales and Service **60**

NOTES:

© 2008 Microchip Technology Inc.

Preface

NOTICE TO CUSTOMERS

All documentation becomes dated, and this manual is no exception. Microchip tools and documentation are constantly evolving to meet customer needs, so some actual dialogs and/or tool descriptions may differ from those in this document. Please refer to our web site (www.microchip.com) to obtain the latest documentation available.

Documents are identified with a "DS" number. This number is located on the bottom of each page, in front of the page number. The numbering convention for the DS number is "DSXXXXXA", where "XXXXX" is the document number and "A" is the revision level of the document.

For the most up-to-date information on development tools, see the MPLAB® IDE on-line help. Select the Help menu, and then Topics to open a list of available on-line help files.

INTRODUCTION

This chapter contains general information that will be useful to know before using the Chapter Name. Items discussed in this chapter include:

- Document Layout
- Conventions Used in this Guide
- Warranty Registration
- Recommended Reading
- The Microchip Web Site
- Development Systems Customer Change Notification Service
- Customer Support
- Document Revision History

DOCUMENT LAYOUT

This document describes how to use the Buck/Boost Converter PICtail Plus Daughter Board as a development tool to emulate and debug firmware on a target board. The manual layout is as follows:

- **Chapter 1. "Introduction"** – This chapter describes the Buck/Boost Converter PICtail Plus Daughter Board and provides a brief description of the hardware.
- **Chapter 2. "Hardware Overview"** – This chapter describes the Buck/Boost Converter PICtail Plus Daughter Board hardware.
- **Chapter 3. "Getting Started"** – This chapter describes the step-by-step process for getting your Buck/Boost Converter PICtail Plus Daughter Board up and running with the MPLAB® In-Circuit Debugger 2 (ICD 2) using a dsPIC33FJ16GS502 device.

© 2008 Microchip Technology Inc.

- **Chapter 4. "Demonstration Program Operation"** – This chapter describes the operation of the Buck/Boost Converter PICtail Plus Daughter Board.
- **Appendix A. "Schematics and Layouts"** – This appendix illustrates the Buck/Boost Converter PICtail Plus Daughter Board layout and provides hardware schematic diagrams.

CONVENTIONS USED IN THIS GUIDE

This manual uses the following documentation conventions:

DOCUMENTATION CONVENTIONS

Description	Represents	Examples
Arial font:		
Italic characters	Referenced books	*MPLAB® IDE User's Guide*
	Emphasized text	...is the *only* compiler...
Initial caps	A window	the Output window
	A dialog	the Settings dialog
	A menu selection	select Enable Programmer
Quotes	A field name in a window or dialog	"Save project before build"
Underlined, italic text with right angle bracket	A menu path	*File>Save*
Bold characters	A dialog button	Click **OK**
	A tab	Click the **Power** tab
N'Rnnnn	A number in Verilog format, where N is the total number of digits, R is the radix and n is a digit.	4'b0010, 2'hF1
Text in angle brackets < >	A key on the keyboard	Press <Enter>, <F1>
Courier New font:		
Plain Courier New	Sample source code	`#define START`
	Filenames	`autoexec.bat`
	File paths	`c:\mcc18\h`
	Keywords	`_asm, _endasm, static`
	Command-line options	`-Opa+, -Opa-`
	Bit values	`0, 1`
	Constants	`0xFF, 'A'`
Italic Courier New	A variable argument	*`file`*`.o`, where *`file`* can be any valid filename
Square brackets [ ]	Optional arguments	`mcc18 [options]` *`file`* `[options]`
Curly brackets and pipe character: { | }	Choice of mutually exclusive arguments; an OR selection	`errorlevel {0|1}`
Ellipses...	Replaces repeated text	`var_name [, var_name...]`
	Represents code supplied by user	`void main (void) { ... }`

© 2008 Microchip Technology Inc.

WARRANTY REGISTRATION

Please complete the enclosed Warranty Registration Card and mail it promptly. Sending in the Warranty Registration Card entitles users to receive new product updates. Interim software releases are available at the Microchip web site.

RECOMMENDED READING

This user's guide describes how to use the Chapter Name. Other useful documents are listed below. The following Microchip documents are available and recommended as supplemental reference resources.

Readme for Chapter Name

For the latest information on using Chapter Name, read the "`Readme.txt`" (an ASCII text file) in the `Readme` subdirectory of the MPLAB IDE installation directory from the Buck/Boost Converter PICtail Plus Daughter Board CD. The Readme file contains update information and known issues that may not be included in this user's guide.

Readme Files

For the latest information on using other tools, read the tool-specific Readme files in the `Readme` subdirectory of the MPLAB IDE installation directory. The Readme files contain updated information and known issues that may not be included in this user's guide.

THE MICROCHIP WEB SITE

Microchip provides online support via our web site at www.microchip.com. This web site is used as a means to make files and information easily available to customers. Accessible by using your favorite Internet browser, the web site contains the following information:

- **Product Support** – Data sheets and errata, application notes and sample programs, design resources, user's guides and hardware support documents, latest software releases and archived software
- **General Technical Support** – Frequently Asked Questions (FAQs), technical support requests, online discussion groups, Microchip consultant program member listing
- **Business of Microchip** – Product selector and ordering guides, latest Microchip press releases, listing of seminars and events, listings of Microchip sales offices, distributors and factory representatives

DEVELOPMENT SYSTEMS CUSTOMER CHANGE NOTIFICATION SERVICE

Microchip's customer notification service helps keep customers current on Microchip products. Subscribers will receive e-mail notification whenever there are changes, updates, revisions or errata related to a specified product family or development tool of interest.

To register, access the Microchip web site at www.microchip.com, click on Customer Change Notification and follow the registration instructions.

The Development Systems product group categories are:

- **Compilers** – The latest information on Microchip C compilers and other language tools. These include the MPLAB C18 and MPLAB C30 C compilers; MPASM™ and MPLAB ASM30 assemblers; MPLINK™ and MPLAB LINK30 object linkers; and MPLIB™ and MPLAB LIB30 object librarians.
- **Emulators** – The latest information on Microchip in-circuit emulators.This includes the MPLAB ICE 2000, MPLAB ICE 4000, and MPLAB REAL ICE™ in-circuit emulator.
- **In-Circuit Debuggers** – The latest information on the Microchip in-circuit debugger, MPLAB ICD 2.
- **MPLAB IDE** – The latest information on Microchip MPLAB IDE, the Windows® Integrated Development Environment for development systems tools. This list is focused on the MPLAB IDE, MPLAB SIM simulator, MPLAB IDE Project Manager and general editing and debugging features.
- **Programmers** – The latest information on Microchip programmers. These include the MPLAB PM3 and PRO MATE II device programmers and the PICSTART® Plus and PICkit™ 1 development programmers.

© 2008 Microchip Technology Inc.

CUSTOMER SUPPORT

Users of Microchip products can receive assistance through several channels:

- Distributor or Representative
- Local Sales Office
- Field Application Engineer (FAE)
- Technical Support

Customers should contact their distributor, representative or field application engineer (FAE) for support. Local sales offices are also available to help customers. A listing of sales offices and locations is included in the back of this document.

Technical support is available through the web site at: http://support.microchip.com

DOCUMENT REVISION HISTORY

Revision A (August 2008)

This is the initial release of this document.

NOTES:

© 2008 Microchip Technology Inc.

Chapter 1. Introduction

Modern power supplies are becoming smaller, more efficient, more flexible and less expensive. These desirable enhancements have come about as digital signal controllers are incorporated into Switch Mode Power Supply (SMPS) designs. Buck converters are used when the desired output voltage is smaller than the input voltage. Boost converters are used when the desired output voltage is higher than the input voltage.

This chapter introduces and provides an overview of the Buck/Boost Converter PICtail Plus Daughter Board. The following topics are included in this chapter:

- Overview
- Features
- Product Package

1.1 OVERVIEW

The Buck/Boost Converter PICtail Plus Daughter Board (also referred to as Daughter Board) is a power supply board. It consists of two independent DC/DC synchronous buck converters and one independent DC/DC boost converter. Figure 1-1 illustrates a block diagram of the Daughter Board.

All of the necessary power, drive and control signals are available in the J1 and J2 connectors. The 16-bit 28-pin Starter Development Board can be used to control one independent DC/DC synchronous buck converters. This board can also control two buck stages, or one buck and one boost stage with hardware modification on the 16-bit 28-pin Starter Development Board. Refer to **Section 2.4.2 "16-bit 28-pin Starter Development Board Controls Buck 1 and Boost Stages"** for more details.

The block diagram of the Daughter Board using the 16-bit 28-pin Starter Development Board is shown in Figure 1-2. All three stages of the Buck/Boost Converter PICtail Plus Daughter Board are controlled by the Explorer 16 Development Board. Figure 1-3 shows a block diagram of the Daughter Board using the Explorer 16 Development Board.

The control boards provide closed-loop Proportional-Integral-Derivative (PID) control in the software to maintain the desired output voltage level. The dsPIC® DSC device provides the necessary memory and peripherals for A/D conversion, PWM generation, analog comparison and general purpose I/O, excluding the need to perform these functions in external circuitry.

SMPS dsPIC® DSC devices are specifically designed to provide low-cost and efficient control for a wide range of power supply topologies. The specialized peripherals facilitate closed-loop feedback control of switch mode power supplies, providing communication for remote monitoring and supervisory control.

The Daughter Board enables the end user to easily transition from analog-to-digital implementation of the power application. The Daughter Board also aids in rapid development of buck converter, boost converter, multi-phase buck converter and two parallel buck converters.

The dsPIC33F SMPS family of devices provides the following features:

- Integrated program and data memory on a single chip
- Ultra-fast interrupt response time and hardware interrupt priority logic
- Up to 4 Msps, on-chip ADC with two SARs, and up to four dedicated and two shared sample/hold circuits for multiple loop control
- Four independent, high-resolution PWM generators specially designed to support different power topologies
- Four analog comparators for control loop implementation and system protection
- On-chip system communications (I^2C™/SPI/UART)
- On-chip Fast RC oscillator for lower system cost
- High-current sink/source for PWM pins: 16 mA/16 mA
- CPU performance: 40 MIPS
- Extensive power saving
- CodeGuard™ Security enabled

FIGURE 1-1: DAUGHTER BOARD BLOCK DIAGRAM

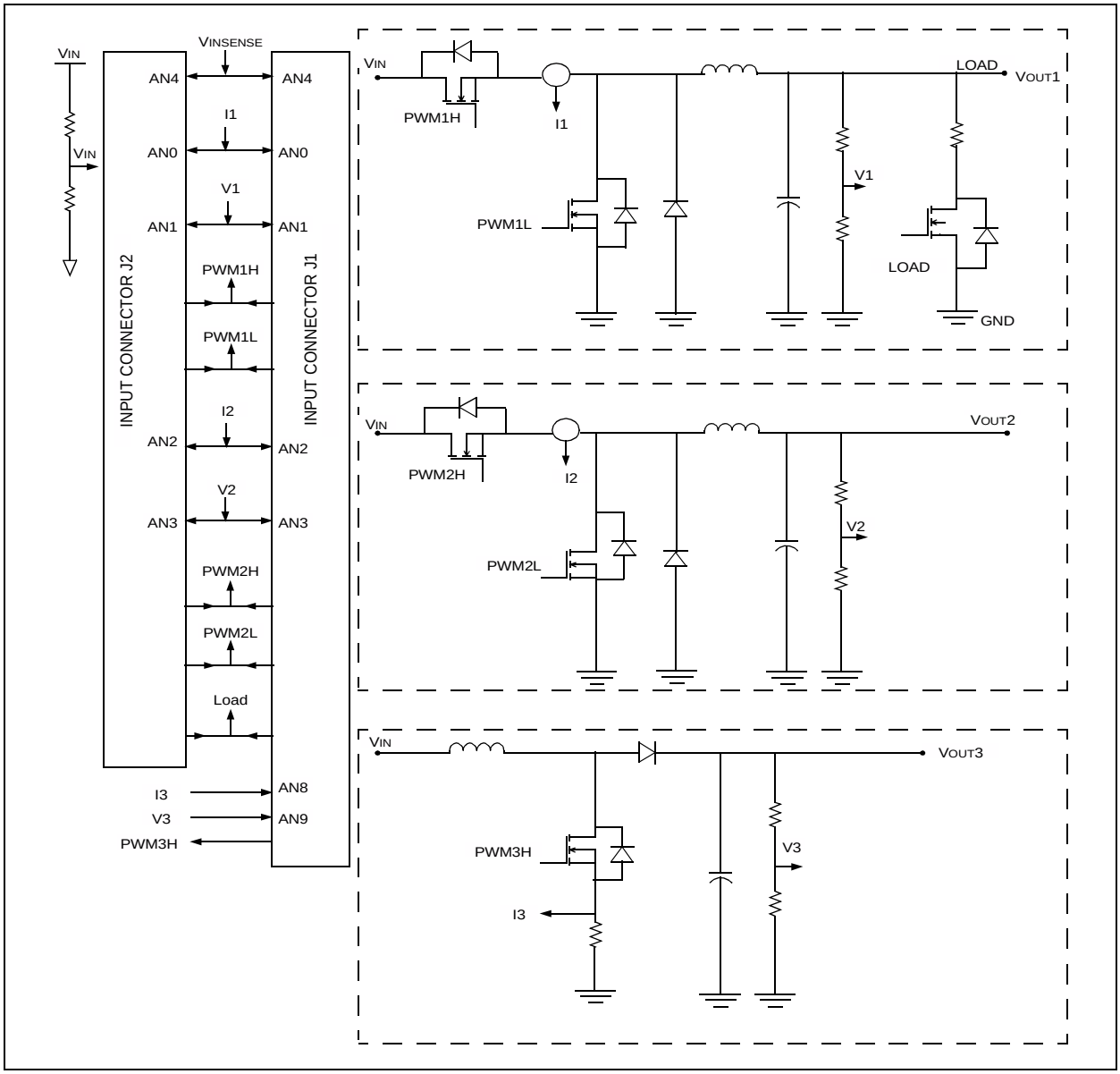

© 2008 Microchip Technology Inc.

FIGURE 1-2: 16-BIT 28-PIN STARTER DEVELOPMENT BOARD WITH DAUGHTER BOARD

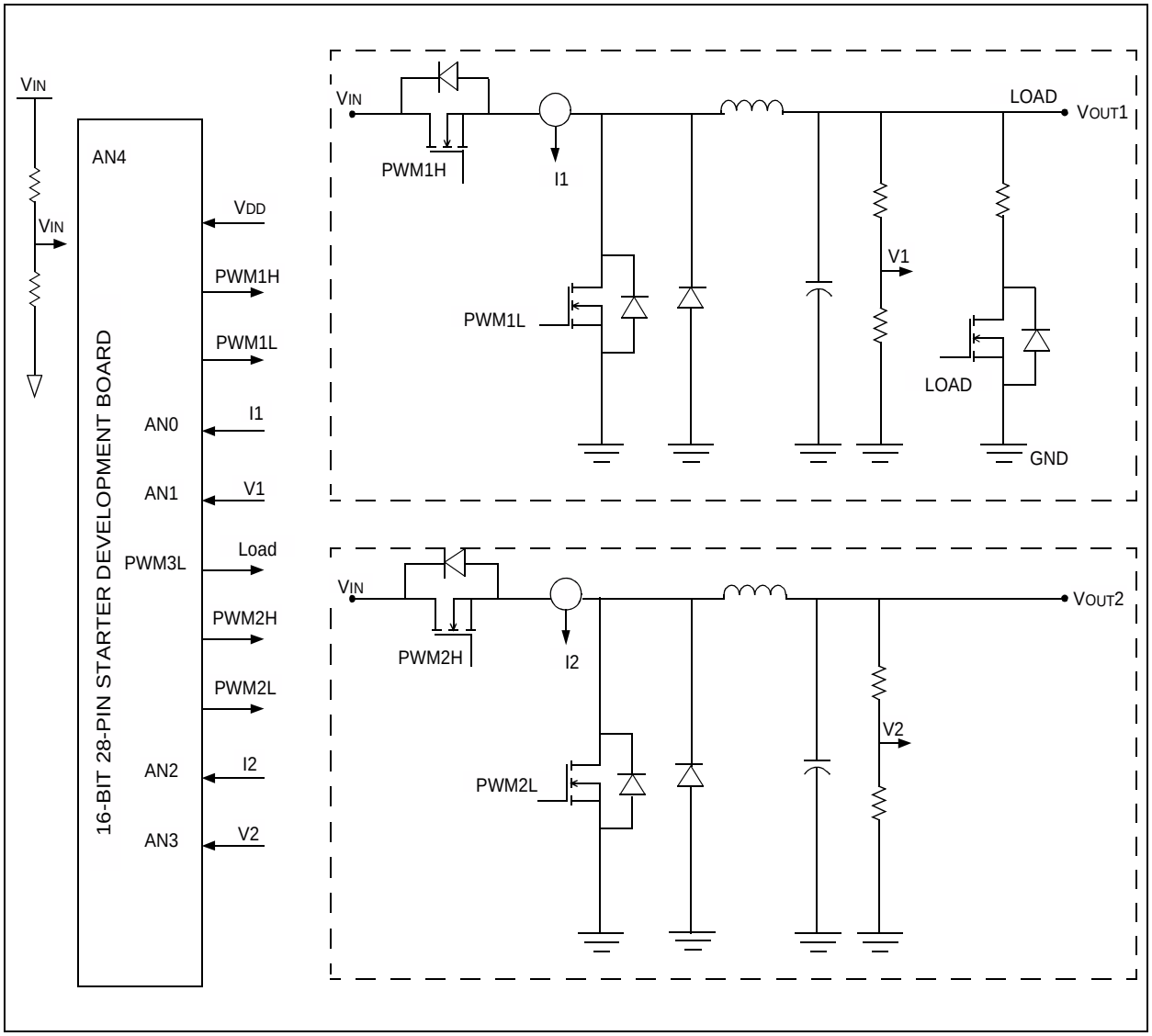

FIGURE 1-3: EXPLORER 16 DEVELOPMENT BOARD WITH DAUGHTER BOARD

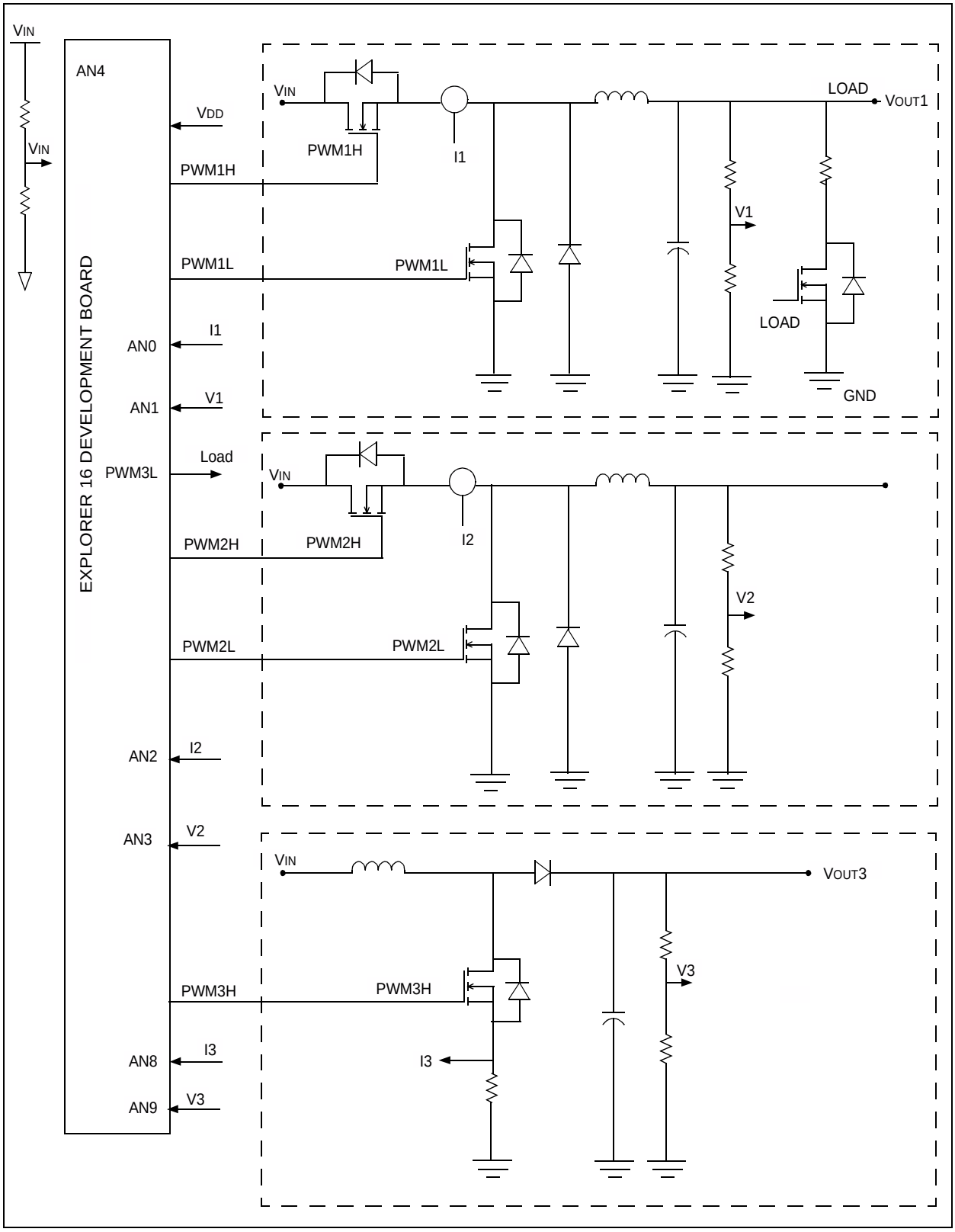

© 2008 Microchip Technology Inc.

1.2 FEATURES

The Buck/Boost Converter PICtail Plus Daughter Board provides the following features:

1.2.1 Power Stages

- Two synchronous buck converter power stages
- One boost converter power stage
- Voltage/current measurement for digital control of buck converters
- Voltage/current measurement for digital control of boost converter
- Switchable, one 5Ω/5W resistive load on Buck Converter 1 output (VOUT1)
- Buck Converter 1 output (VOUT1) on J4 connector for external loading
- Buck Converter 2 output (VOUT2) on J5 connector for external loading
- Boost Converter output (VOUT3) on J8 connector for external loading
- Connector J9 for auxiliary power input

1.2.2 Additional Features

- 5 kΩ Potentiometer (RP1) connected via jumper J10
- Input voltage source selection via jumper J6
- Additional resistive load R46 via jumper J11
- Connectors J1 and J2 (Explorer 16/16-bit 28-pin Starter Development Board)
- PMBus™ Connector (J3)

1.2.3 Daughter Board Power

- Auxiliary power input (J9): +7V to +15V (+9V nominal)
- 9V power input is through input connectors J2 and J1
- LED power-on indicator (D14)
- LED output voltage indicators (D11, D12 and D13)

Note: 9V input is supplied from the controller card (16-bit 28-pin Starter Development Board or Explorer 16 Development Board). All 16-bit 28-pin Starter Development Boards should have a blue wire connecting Pin 1 of J1 to Pin 28 of J2. If no blue wire connects them, connect a wire between them to supply the 9V input to the Buck/Boost Converter PICtail Plus Daughter Board.

1.3 PRODUCT PACKAGE

The Buck/Boost Converter PICtail Plus Daughter Board kit consists of the following items:

- Buck/Boost Converter PICtail Plus Daughter Board
- Buck/Boost Converter PICtail Plus Daughter Board CD

The CD consists of the application software, example code, Readme file and User's Guide.

NOTES:

© 2008 Microchip Technology Inc.

Chapter 2. Hardware Overview

This chapter lists and describes the hardware elements and components of the Buck/Boost Converter PICtail Plus Daughter Board (also referred to as Daughter Board). The following topics are included:

- Daughter Board Connectors
- Using the Daughter Board with the Explorer 16 Development Board
- Using the Daughter Board with the 16-bit 28-pin Starter Development Board
- Power Rating of Converter Stage
- Power Rating of Converter Stage

2.1 DAUGHTER BOARD CONNECTORS

The Daughter Board consists of different power sections along with the input and output connectors for signal and power connections. Figure 2-1 depicts the Daughter Board, the input and output connectors and their locations.

FIGURE 2-1: BUCK/BOOST CONVERTER PICtail™ PLUS DAUGHTER BOARD

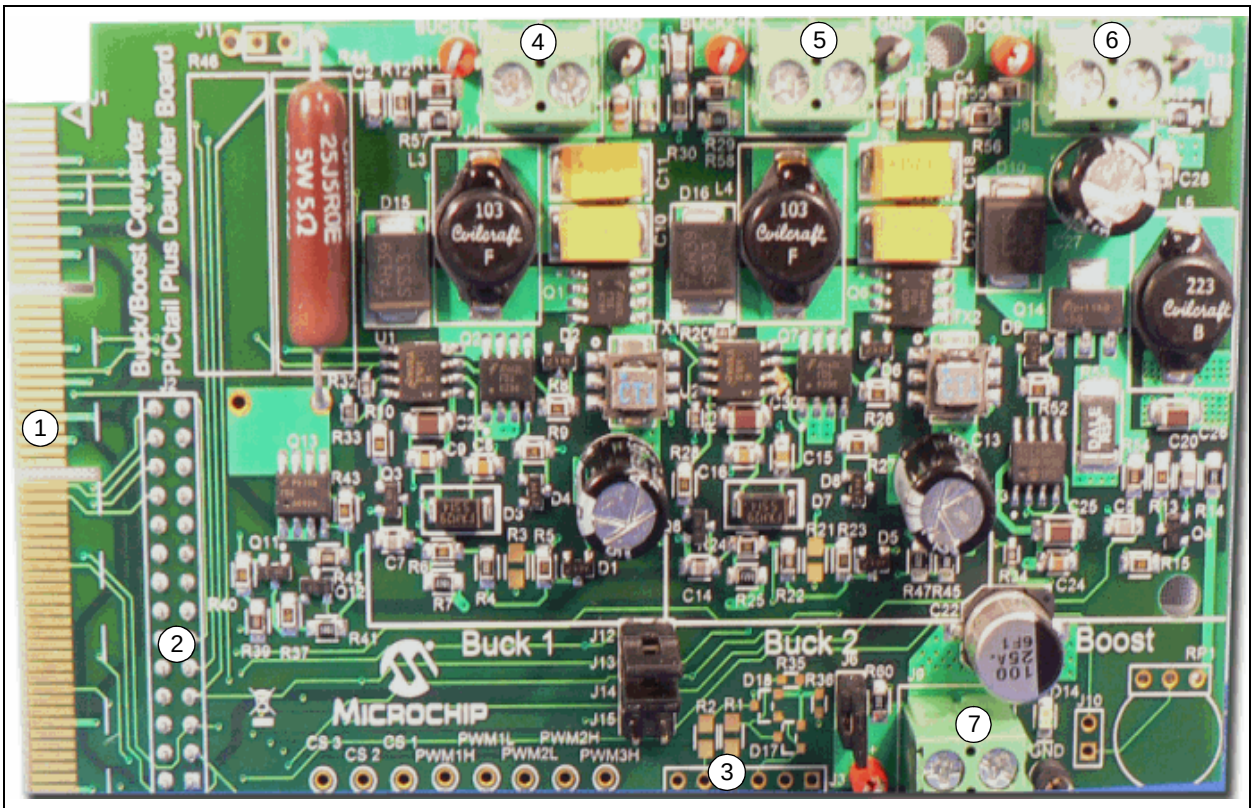

1. J1 – To connect Explorer 16 Development Board
2. J2 – To connect 16-bit 28-pin Starter Development Board
3. J3 – PMBus™ interface connector
4. J4 – VOUT1 connector
5. J5 – VOUT2 connector
6. J8 – VOUT3 connector
7. J9 – Auxiliary input power connector

> **Note:** The Daughter Board only consists of the three power trains of the DC/DC converter sections. Either the 16-bit 28-pin Starter Development Board with the dsPIC33FJ16GS502 device, or the Explorer 16 Development Board with the dsPIC33FJ16GS504 device can be used to control the DC/DC power sections of the Daughter Board. The J1 and J2 connectors provide the necessary signals for control purposes.

2.2 DAUGHTER BOARD USER HARDWARE INTERFACE

This section describes the hardware interface of the Daughter Board and the power rating of each converter's section. Figure 2-2 displays the hardware elements (pin headers, jumpers, LED and potentiometer).

FIGURE 2-2: BUCK/BOOST CONVERTER PICtail™ PLUS DAUGHTER BOARD HARDWARE ELEMENTS

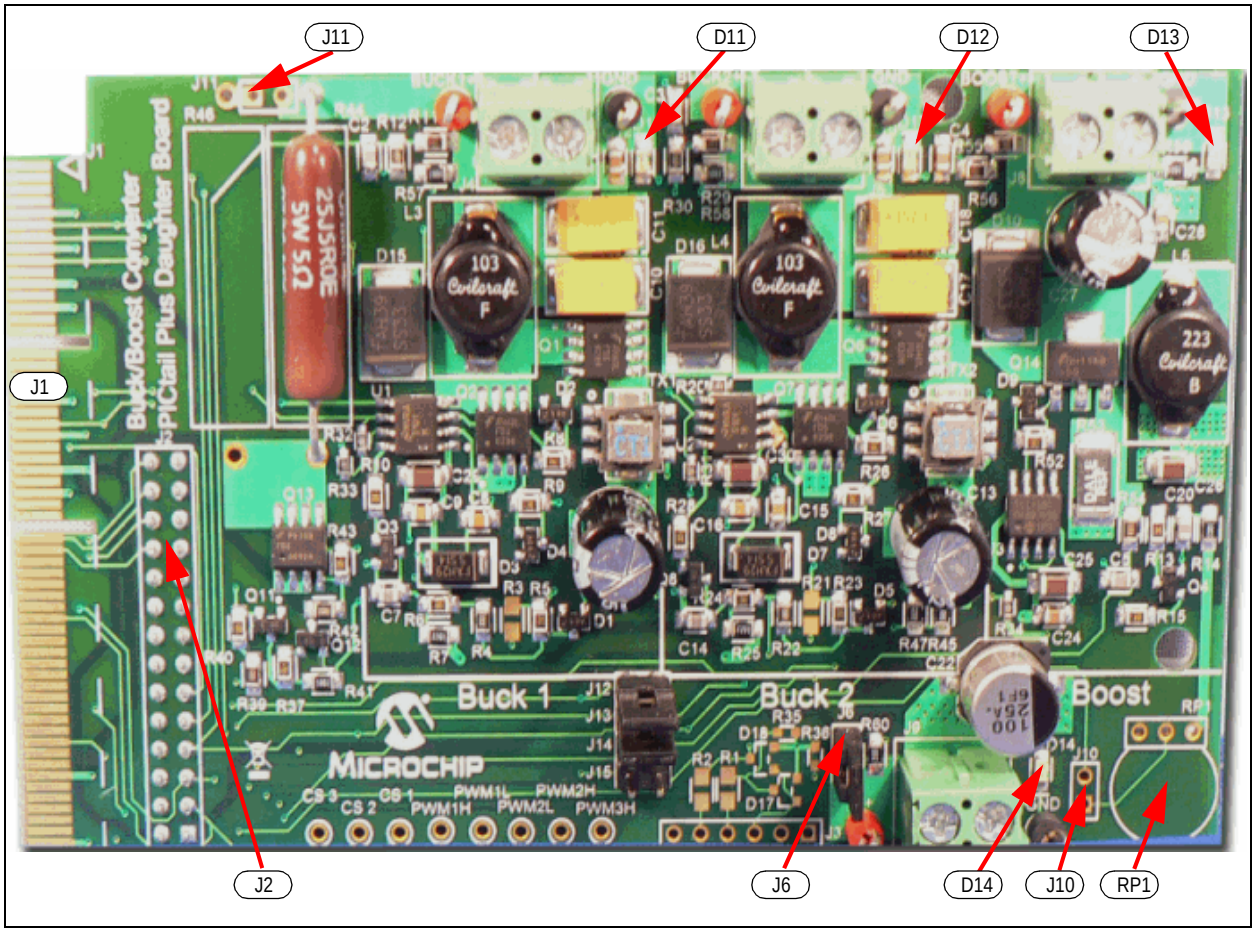

2.2.1 Auxiliary Input Power Connector

The Daughter Board can be connected to the auxiliary/bench power DC source through the J9 input connector. Jumper J6 should be removed while working with the auxiliary/bench power DC source. See Figure A-5 for the location of this jumper.

2.2.2 PMBus Interface Connector J3

The Daughter Board allows the user to implement the PMBus on the SMPS dsPIC DSC device using the J3 connector. See Figure A-6 for the location of this jumper.

© 2008 Microchip Technology Inc.

2.2.3 16-bit 28-pin Starter Development Board Connector J2

The two converter stage sections of the Daughter Board can be controlled using the 16-bit 28-pin Starter Development Board. Table 2-1 lists all of the power and signal connections on the Daughter Board J2 connector to the user interface with the 16-bit 28-pin Starter Development Board. See Figure A-6 for the location of this connector.

TABLE 2-1: SIGNAL AND POWER CONNECTION FOR 16-BIT 28-PIN STARTER DEVELOPMENT BOARD (J2)

Pin Number Primary	Assignment	Primary Use
1	NC	Not Connected
2	AN0	Analog Input 0 (Buck Converter 1 current)
3	AN1	Analog Input 1 (Buck Converter 1 voltage)
4	AN2	Analog Input 2 (Buck Converter 2 current)
5	AN3	Analog Input 3 (Buck Converter 2 voltage)
6	AN4	Analog Input 4 (Input Voltage)
7	NC	Not Connected
8	V_{SS}	Ground reference for logic and I/O pins
9	NC	Not Connected
10	NC	Not Connected
11	NC	Not Connected
12	NC	Not Connected
13	V_{DD}	Positive supply for logic and I/O pins
14	NC	Not Connected
15	RB15	PMBUSAUX2
16	RB5	PMBUSAUX1
17	SCL	SCL/TX
18	SDA	SCL/RX
19	V_{SS}	Ground reference for logic and I/O pins
20	V_{DD}	+3.3V_DIG
21	PWM3H	PWM Boost Converter
22	I/O	Load
23	PWM2H	PWM 2 High Output (Buck Converter 2)
24	PWM2L	PWM 2 Low Output (Buck Converter 2)
25	PWM1H	PWM 1 High Output (Buck Converter 1)
26	PWM1L	PWM 1 Low Output (Buck Converter 1)
27	NC	Not Connected
28	+9V	Input Voltage for two buck stages

2.2.4 Explorer 16 Development Board Connector J1

The two buck sections and one boost section of the Daughter Board can be controlled using the Explorer 16 Development Board. Table 2-2 lists all the power and signal connections on the Daughter Board J1 connector to the user interface with the Explorer 16 Development Board. See Figure A-6 for the location of this connector.

TABLE 2-2: SIGNAL AND POWER CONNECTION FOR THE EXPLORER 16 DEVELOPMENT BOARD (J1)

Pin Number Primary	Assignment	Primary Use
79	AN0	Analog Input 0 (Buck Converter 1 current)
80	AN1	Analog Input 1 (Buck Converter 1 voltage)
45	PWM1H	PWM 1 High Output (Buck Converter 1 drive)
46	PWM1L	PWM 1 Low Output (Buck Converter 1 drive)
8	AN2	Analog Input 2 (Buck Converter 2 current)
6	AN3	Analog Input 3 (Buck Converter 2 voltage)
12	PWM2H	PWM 2 High Output (Buck Converter 2 drive)
11	PWM2L	PWM 2 Low Output (Buck Converter 2 drive)
50	AN4	Analog Input 4 (Input Voltage)
102	AN8	Analog Input 8 (Boost Converter Voltage)
80	AN9	Analog Input 9 (Boost Converter Voltage)
17	PWM3H	PWM3H High Output (Boost Converter drive)
13	I/O	Load Drive for Buck Converter 1 Load
101	AN10	Analog Input 10 (POT RP1)
65	RB15	PMBUSAUX2
66	RB5	PMBUSAUX1
67	SCL	SCL/TX
68	SDA	SCL/RX
9, 10, 119, 120	3.3VDIG_GND	Ground Reference for Digital I/O pins
21, 22, 53, 54, 107, 108	+3.3V_DIG	Digital 3.3V
15, 16, 41, 42	9VANA_GND	Ground Reference for Logic and I/O pins
25, 26, 57, 58	+9V	9V Input Voltage
1-5, 14, 18-20, 23, 24, 27-30, 33-40, 43, 44, 49, 51, 52, 55, 56, 59-62, 69-78, 81-95, 97-100, 103-106, 109-118	NC	Not Connected

© 2008 Microchip Technology Inc.

2.2.5 VOUT1 J4 (Buck1+)

An external load can be connected to VOUT1 through the J4 connector. One on-board parallel resistor, R44 (5Ω/5W), is connected at the output of VOUT1 through MOSFET Q13 to optionally load the Buck 1 converter circuit. Resistor R45 is on-board, and there is space to solder resistor R46 onto the board. When resistor R46 is connected to VOUT1, the J11 jumper must be open while working with +9V power from the control board. The on-board load resistor can be connected to VOUT1 by controlling the signal name “Load”. The “Load” signal is the I/O pin of the SMPS dsPIC DSC device, and is active-high. See Figure A-2 for the location of this connector.

2.2.6 VOUT2 J5 (Buck2+)

An external load can be connected to VOUT2 through the J5 connector. VOUT2 can load up to a maximum of 3 amps when the auxiliary input voltage source is connected at the J9 input connector. See Figure A-3 for the location of this connector.

2.2.7 VOUT3 J8 (Boost)

An external load can be connected to VOUT3 through the J8 connector. VOUT3 can load up to 0.75 amps when the auxiliary input voltage source is connected at the J9 input connector. See Figure A-4 for the location of this connector.

2.2.8 Jumpers

The Daughter Board consists of three jumpers that determine its features. Table 2-3 lists jumpers and their functions.

TABLE 2-3: JUMPERS

Jumpers	Description	Default Configurations
J6	Select either 9V power provided by the Explorer 16 Development Board or 16-bit 28-pin Starter Development Board, and an external power supply	Short with jumper header (closed)
J10	Connects potentiometer RP1 to AN10 on Explorer 16 Development Board	Open
J11	Connects R46 load resistor to VOUT1	Open
J12	Buck 2 voltage feedback selection	Short with jumper header (closed)
J13	Buck 2 current feedback selection	Short with jumper header (closed)
J14	Boost current feedback selection	Open
J15	Boost voltage feedback selection	Open

2.2.9 Potentiometer and LED

The Daughter Board consists of a potentiometer and LEDs for the user application. Table 2-4 lists components and their functions.

TABLE 2-4: POTENTIOMETERS AND LED

Label	Hardware Elements
RP1	Potentiometer connected to AN10 of Explorer 16 Development Board controller
D11	Buck 1 output LED
D12	Buck 2 output LED
D13	Boost output voltage LED
D14	Input voltage LED

2.2.10 Test Points

The Daughter Board provides the various test points of the PWM signals, feedback signals and input and output voltages for the user application. Table 2-5 lists the PWM test points that can be used to check the PWM gate pulse for all three power stages.

TABLE 2-5: PWM TEST POINTS

Test Points	Description
PWM1H	Buck MOSFET gate drive of Buck 1 converter stage
PWM1L	Synchronous MOSFET gate drive of Buck 1 converter stage
PWM2H	Buck MOSFET gate drive of Buck 2 converter stage
PWM2L	Synchronous MOSFET gate drive of Buck 2 converter stage
PWM3H	Boost MOSFET gate drive for Boost converter stage

Table 2-6 lists the feedback signal test points that can be used to check the feedback signal waveforms and values.

TABLE 2-6: FEEDBACK SIGNAL TEST POINTS

Test Points	Description
Current Sense1	Current feedback signal for Buck 1 converter stage
Current Sense2	Current feedback signal for Buck 2 converter stage
Current Sense3	Current feedback signal for Boost converter stage

Table 2-7 shows the power test points that can be used to verify the input and output voltages.

TABLE 2-7: POWER TEST POINTS

Test Points	Description
V+	Input Voltage Test Point
Buck1+	VOUT1 voltage test point
Buck2+	VOUT2 voltage test point
Boost+	VOUT3 voltage test point
GND	Ground potential test point

© 2008 Microchip Technology Inc.

2.3 USING THE DAUGHTER BOARD WITH THE EXPLORER 16 DEVELOPMENT BOARD

This section describes the hardware connection of the Daughter Board with the Explorer 16 Development Board. Figure 2-3 displays the Daughter Board hardware connection (MPLAB ICD 2 and power supply) to the Explorer 16 Development Board.

The dsPIC33FJ16GS504 SMPS device controls both buck stages (Buck 1 and Buck 2), as well as the boost stage through the Explorer 16 Development Board simultaneously.

> **Note:** To operate all three converters using the Explorer 16 Development Board, ensure that J12, J13 and J6 are shorted with the jumper header, and J14 and J15 are open before powering up the board.

The potentiometer R6 (10 kΩ), in series with the R12 resistor on the Explorer 16 Development Board, is connected to analog input channel (AN5) of the SMPS dsPIC DSC device. The potentiometer R6 on the Daughter Board is connected to the analog input channel (AN10) through the J10 jumper. Both potentiometers can be used for development purposes to simulate any feedback signal.

FIGURE 2-3: DAUGHTER BOARD CONNECTED TO THE EXPLORER 16 DEVELOPMENT BOARD

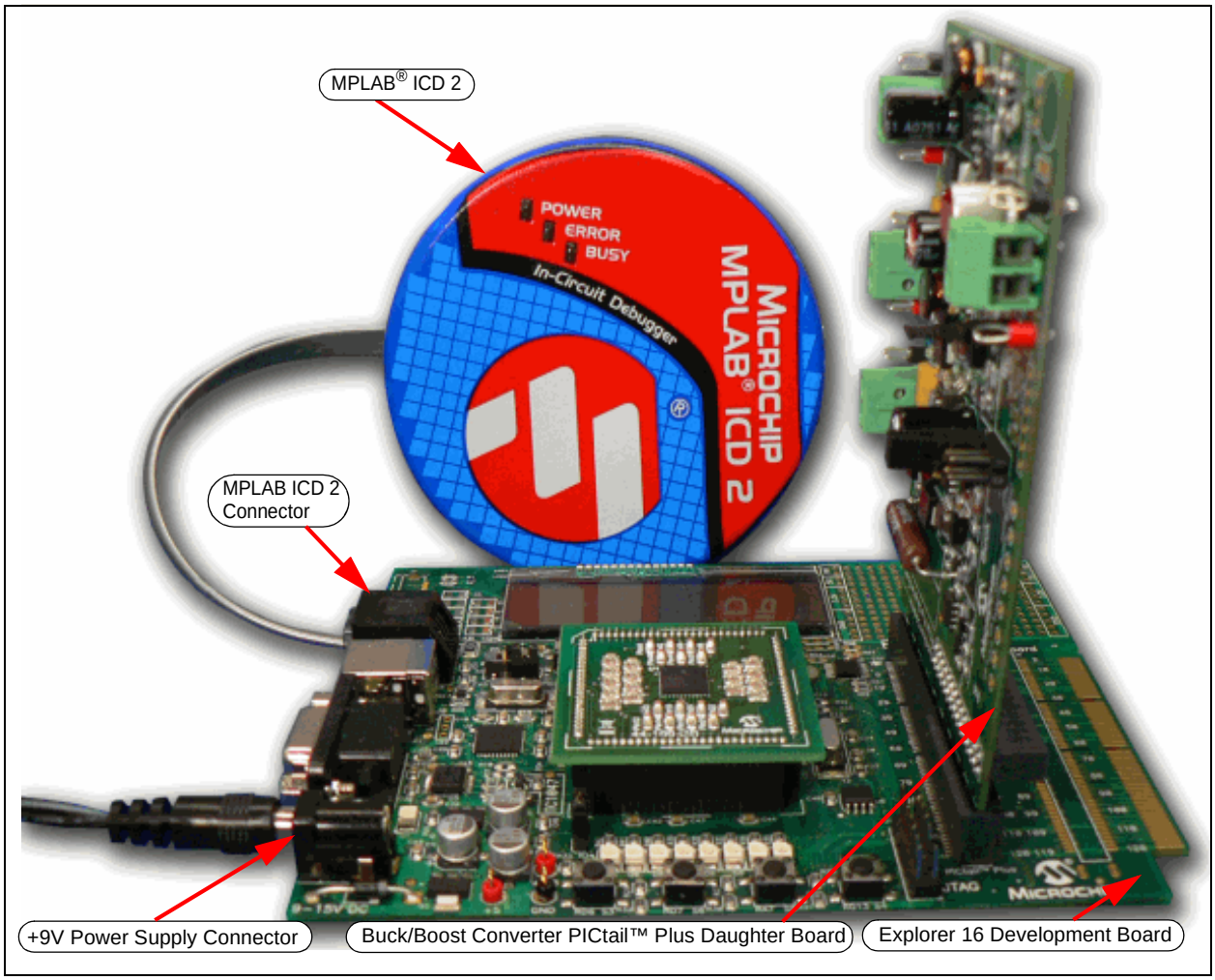

2.4 USING THE DAUGHTER BOARD WITH THE 16-BIT 28-PIN STARTER DEVELOPMENT BOARD

This section describes the use of a 16-bit 28-pin Starter Development Board with the Buck/Boost Converter PICtail Plus Daughter Board.

Figure 2-4 shows the 16-bit 28-pin Starter Development Board and its hardware elements. For more details, refer to the "*16-Bit 28-Pin Starter Development Board User's Guide*" (DS51656), which is available from the Microchip website (http://www.microchip.com).

FIGURE 2-4: 16-BIT 28-PIN STARTER DEVELOPMENT BOARD

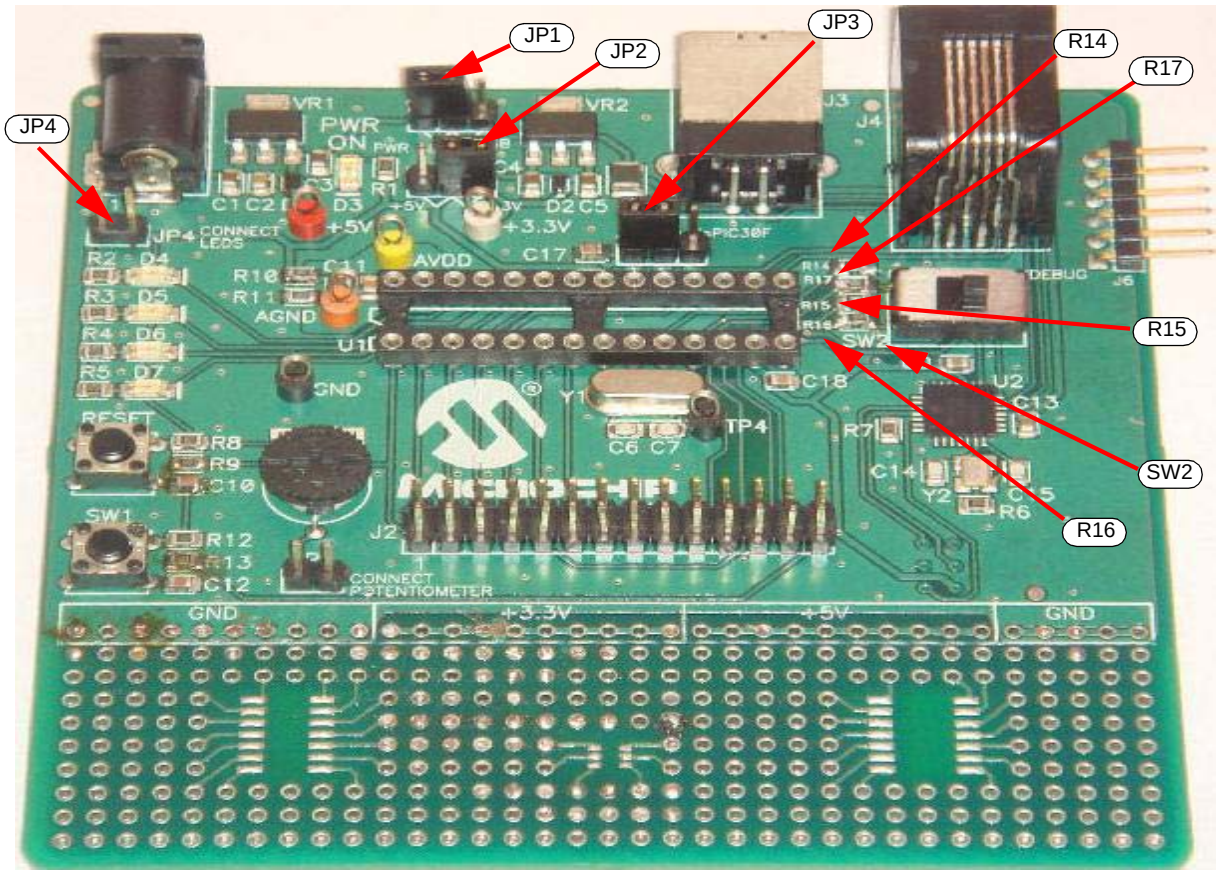

The potentiometer, RP1 (10 kΩ), with the J5 jumper on the 16-bit 28-pin Starter Development Board, is connected to the analog input channel (AN5) of the SMPS dsPIC DSC device. Figure 2-5 shows the connection of a 16-bit 28-pin Starter Development Board to a Daughter Board with ICD 2 and a 9V power supply.

Ensure that the following changes are made to the 16-bit 28-pin Starter Development Board prior to connecting the 16-bit 28-pin Starter Development Board to the Daughter Board:

- Remove resistors R14 and R15 (to control Buck 2 or Boost converter)
- JP1 in pin 1-2 position (supply)
- JP2 in pin 2-3 position (+3.3V)
- JP3 in 1-2 position (dsPIC33F/PIC24)
- JP4 open
- SW2 in USB/DEBUG mode

© 2008 Microchip Technology Inc.

FIGURE 2-5: DAUGHTER BOARD HARDWARE CONNECTED TO A 16-BIT 28-PIN STARTER DEVELOPMENT BOARD

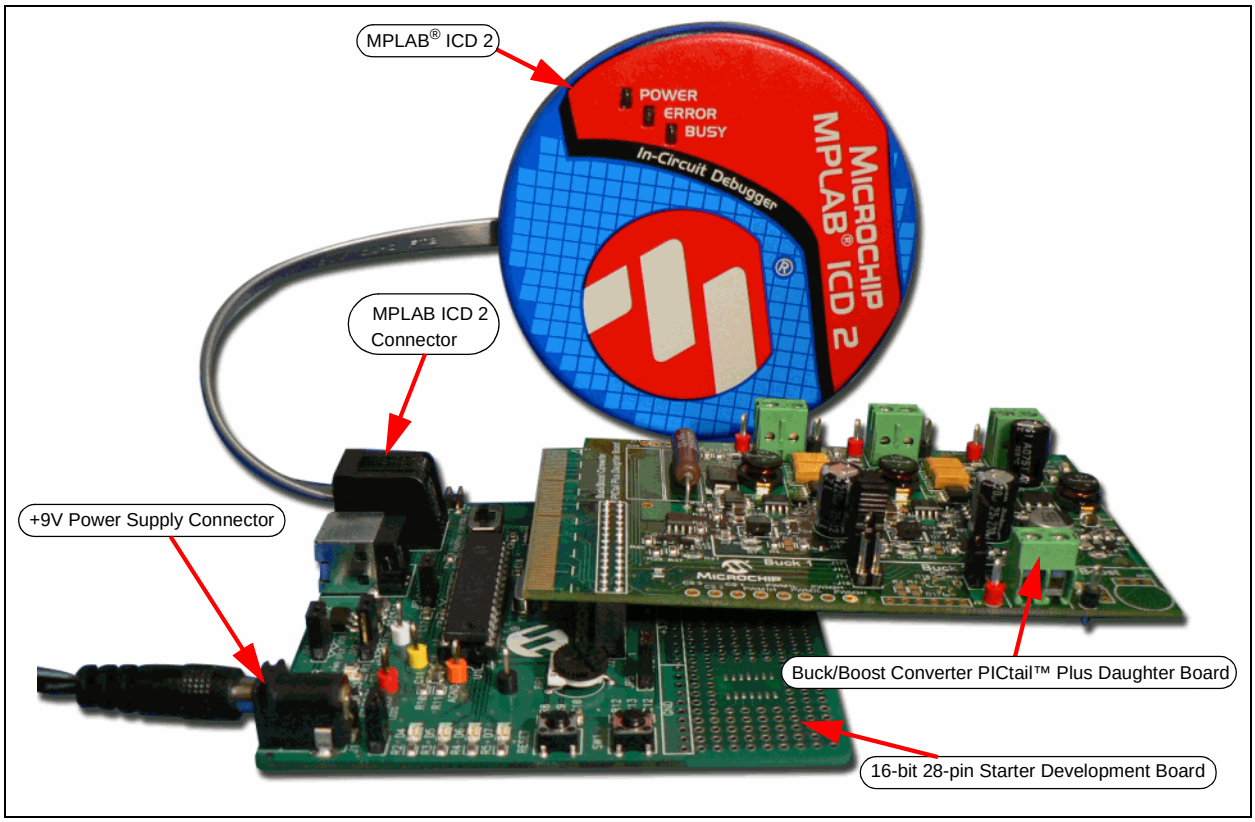

2.4.1 16-bit 28-pin Starter Development Board Controls Buck 1 and Buck 2 Stages (Default Jumper Configuration)

The dsPIC33FJ16GS502 SMPS device controls buck stages Buck 1 and Buck 2 through the 16-bit 28-pin Starter Development Board as the default configuration on the Daughter Board, refer to Table 2-3. The two buck stages can be controlled as multi-phase or as two parallel converters by shorting the VOUT1 (Buck1+) and VOUT2 (Buck2+) output, and by programming the output of buck stages to the same output voltage value.

Note 1: To operate the two buck converters using the 16-bit 28-pin Starter Development Board, ensure that J12, J13 and J6 are shorted with the jumper header, and J14 and J15 are open before powering up the board.

2: The software file `Buck1 Voltage Mode with 28P Starter Board` on the Buck/Boost Converter PICtail Plus Daughter Board CD only provides control for the Buck 1 stage.

2.4.2 16-bit 28-pin Starter Development Board Controls Buck 1 and Boost Stages

This section describes the hardware changes that must be performed to control the Buck 1 and Boost stages. Figure 2-6 displays the feedback jumper, which must be modified in the Daughter Board. See Figure A-4 for the complete Daughter Board schematics.

FIGURE 2-6: FEEDBACK JUMPERS

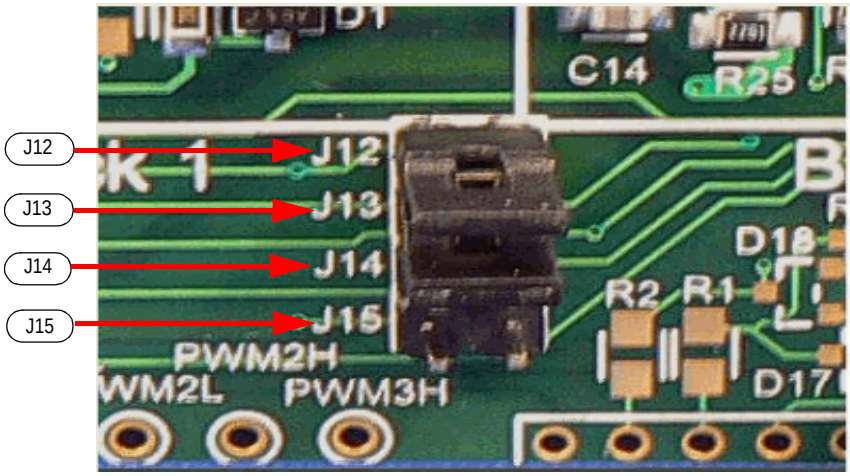

2.4.2.1 HARDWARE

The following hardware changes are required in the Daughter Board to enable control of the Buck 1 and Boost stage:

- Jumper J12 and J13: Open
- Jumper J14 and J15: Short with jumper header (close)

2.4.2.2 SOFTWARE

The following additional changes in software are required to enable control of the Buck 1 and Boost stage:

- Boost Current feedback through analog input channel (AN2)
- Boost Voltage feedback through analog input channel (AN3)
- Boost PWM output (PWM3H)
- PWM2 output pin must be controlled by I/O port and driven low

Note: The software file `Buck1 Voltage Mode with 28P Starter Board` on the Buck/Boost Converter PICtail Plus Daughter Board CD only provides control for the Buck 1 stage.

© 2008 Microchip Technology Inc.

2.5 POWER RATING OF CONVERTER STAGE

All three DC/DC power stages in a Daughter Board can be loaded externally through the output terminal blocks J4, J5 and J8. For loading any power stage externally, the user must provide an auxiliary power source to the Daughter Board through input terminal block J9.

2.5.1 Buck 1 Converter

The Buck 1 converter stage is rated for a maximum output current of 3 amps through the J4 connector. The output voltage of the buck converter (VOUT1) can be programmed for 0V-5V output. The hardware gain [5k/(3.3k + 5k)] of the voltage feedback of VOUT1 is provided by the resistor divider network of R11 and R12. The hardware gain of the current feedback is provided by the current transformer (Tx1) with turns ratio (1:60) and burden resistor R5. The circuitry consists of R6, R7, C7 and Q3, and provides slope compensation for current feedback (Current Sense1).

2.5.2 Buck 2 Converter

The Buck 2 converter stage is rated for a maximum output current of 3 amps through the J5 connector. The output voltage of the buck converter (VOUT2) can be programmed for 0V-5V output. The hardware gain [5k/(3.3k + 5k)] of the voltage feedback of VOUT2 is provided by the resistor divider network of R29 and R30. The hardware gain of the current feedback is provided by the current transformer (Tx2) with turns ratio (1:60) and burden resistor R23. The circuitry consists of R24, R25, C14 and Q8, and provides slope compensation for current feedback (Current Sense2).

2.5.3 Boost Converter

The Boost converter stage is rated for a maximum output current of 0.75 amps through the J8 connector. The output voltage of the boost converter (VOUT3) can be programmed up to a maximum output of 20V. The hardware gain [20k/(20k + 3.3k)] of the voltage feedback of VOUT3 is provided by the resistor divider network of R55 and R56. The hardware gain of the current feedback is provided by the current sense resistor R53 (current sense boost/Current Sense3). The circuitry consists of R13, R14, C20 and Q4 and provides slope compensation for current feedback (current sense boost/Current Sense3).

NOTES:

© 2008 Microchip Technology Inc.

Chapter 3. Getting Started

This chapter provides details to get started using the Daughter Board with the 16-bit 28-pin Starter Development Board using the dsPIC33FJ16GS502 SMPS device. The 16-bit 28-pin Starter Development Board is modified as per **Section 2.4 "Using the Daughter Board with the 16-bit 28-pin Starter Development Board"**. While working with the Daughter Board along with the Explorer 16 Development Board using a dsPIC33FJ16GS504 device, please refer to the Explorer 16-specific note that is specified in the corresponding instructions.

The following topics are covered in this chapter:

- Overview
- Creating the Project
- Building the Code
- Programming the Device
- Debugging the Code

3.1 OVERVIEW

This section describes the main features of MPLAB IDE and the MPLAB ICD 2 In-Circuit Debugger because they are used in the 16-bit 28-pin Starter Development Board. This section provides information on performing the following tasks:

1. Creating a project using the Project Wizard.
2. Assembling and linking the code, and setting the Configuration bits.
3. Setting up MPLAB IDE to use the MPLAB ICD 2 In-Circuit Debugger.
4. Programming the chip with MPLAB ICD 2.
5. Viewing code execution.
6. Viewing registers in the Watch window.
7. Setting a breakpoint and setting the code halt in the specific location.
8. Using the function keys to Reset, Run, Halt and Single Step the code.

Before performing these steps, save the Buck/Boost Converter PICtail Plus Daughter Board firmware from the CD in the following location: `C:\Program Files\Microchip\`

Note 1: The demo software using 16-bit 28-pin Starter Development Board will be under folder: `C:\Program Files\Microchip\Buck Boost PICtail Plus Board\Buck1 Voltage Mode with 28P Starter Board`.

2: The demo software using Explorer 16 Development Board will be under the folder: `C:\Program Files\Microchip\Buck Boost PICtail Plus Board\3-Stage Voltage Mode with Explorer 16`

3: Both the above folders comprise of the project file (`*.mcp`) and workspace file (`*.mcw`). The user can use these files to program the device, or the user can create their own project and workspace file by performing the steps listed in this Chapter.

3.2 CREATING THE PROJECT

This section describes the process of creating a project and workspace in MPLAB IDE. In any particular folder, one project and one workspace are present.

Note: These instructions presume the use of MPLAB IDE v8.10 or later.

A project consists of files that are used to build an application (source code, linker script files, etc.) along with their association to various build tools and build options. The workspace consists of the following features:

- One or more projects
- Information on the selected device
- Debug tool and/or programmer, open windows and their location
- Other IDE configuration settings

MPLAB IDE provides a Project Wizard to create new projects.

3.2.1 Creating the Project

Using the Project Wizard involves four steps:

- Selecting the Device
- Selecting the Language Toolsuite
- Naming the Project
- Adding Files to the Project

Use the following procedures to complete each of the four steps.

© 2008 Microchip Technology Inc.

3.2.1.1 PROJECT WIZARD STEP ONE – SELECTING THE DEVICE

1. Start MPLAB IDE.
2. Close any open workspace (*File>Close Workspace*).
3. Select *Project>Project Wizard*. The Welcome dialog appears.
4. Click **Next** to continue. The Select a device dialog appears.
5. From the Device drop-down list, select the required device, as shown in Figure 3-1.

FIGURE 3-1: SELECT A DEVICE

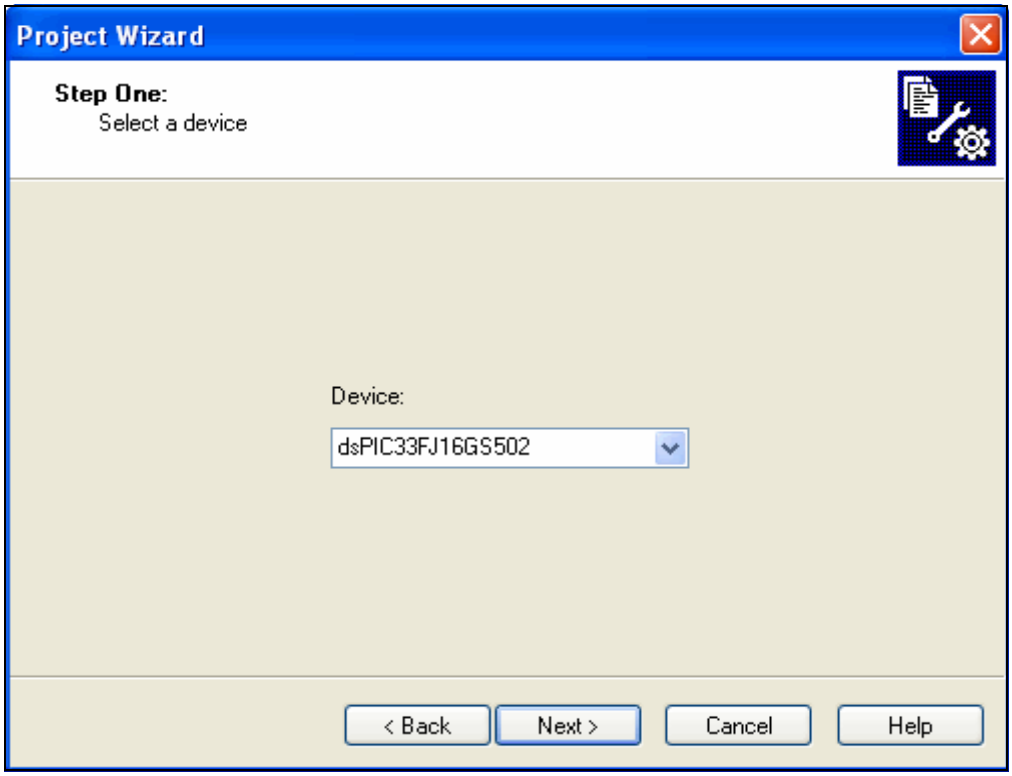

6. Click **Next** to continue. The Select a language toolsuite dialog appears, as shown in Figure 3-2.

Note:	While using the Explorer 16 Development Board, select the dsPIC33FJ16GS504 device.

3.2.1.2 PROJECT WIZARD STEP TWO – SELECTING THE LANGUAGE TOOLSUITE

1. As shown in Figure 3-2, select Microchip C30 Toolsuite from the Active Toolsuite drop-down list. This toolsuite includes the assembler and linker that is to be used in the project.

> **Note:** To create a project that consists of source files written in a language other than Microchip Assembly, select the specific language toolsuite from the drop-down menu.

FIGURE 3-2: SELECT LANGUAGE TOOLSUITE

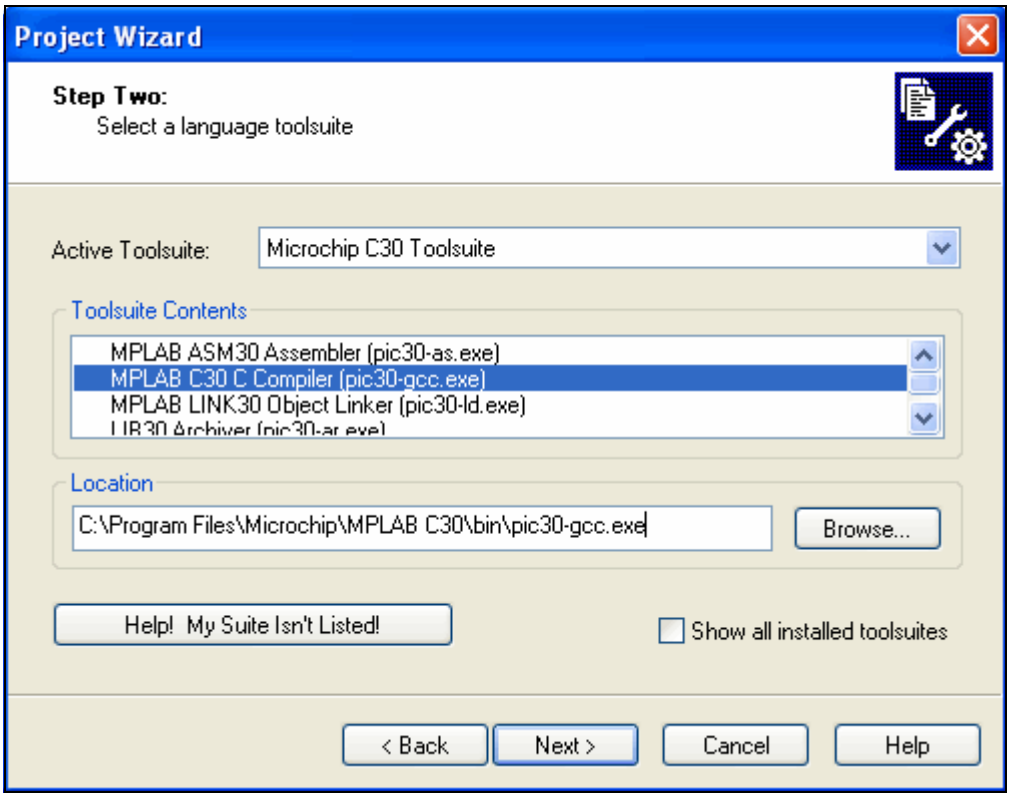

2. Select MPLAB C30 C Complier (`pic30-gcc.exe`) from the Toolsuite Contents options.
3. Click **Next** to continue. The Create a new project, or reconfigure the active project? dialog appears, as shown in Figure 3-3.

© 2008 Microchip Technology Inc.

3.2.1.3 PROJECT WIZARD STEP THREE – NAME YOUR PROJECT

1. As shown in Figure 3-3, under Create New Project File, click **Browse...**, and navigate to:
   `C:\Program Files\Microchip\Buck BoostPicTail Plus Board\Buck1 Voltage Mode with 28P Starter Board.`

> **Note:** While using the Explorer 16 Development Board, navigate to the following path in the "Create New Project File": `C:\Program Files\Microchip\Buck Boost PicTail Plus Board\3-Stage Voltage Mode with Explorer 16.`

FIGURE 3-3: NAME YOUR PROJECT

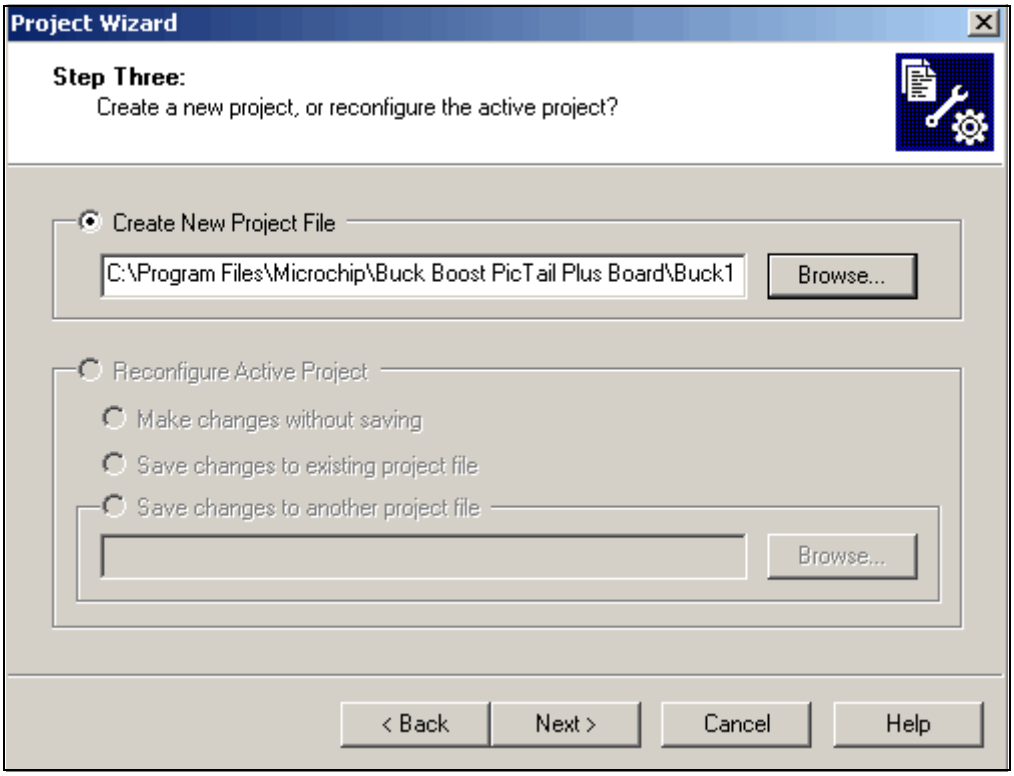

2. In the resulting Save Project As dialog, enter the project name as `Buck1 Voltage Mode.mcp`, and then click **Save**.

> **Note:** While using the Explorer 16 Development Board, enter the project name as `3-Stage Voltage Mode.mcp`.

3. Click **Next** to continue. The Add existing files to your project dialog appears, as shown in Figure 3-4.

3.2.1.4 PROJECT WIZARD STEP FOUR – ADD FILES TO YOUR PROJECT

1. As shown in Figure 3-4, from the left pane, navigate to `C:\...\Buck1 Voltage Mode with 28P Starter Board`, and select the following files:
   - `init.c`
   - `isr.c`
   - `main.c`
   - `dsp.h`
   - `function.h`
   - `dspcommon.inc`
   - `isr_asm.s`
   - `pid.s`

FIGURE 3-4: ADD FILES TO PROJECT

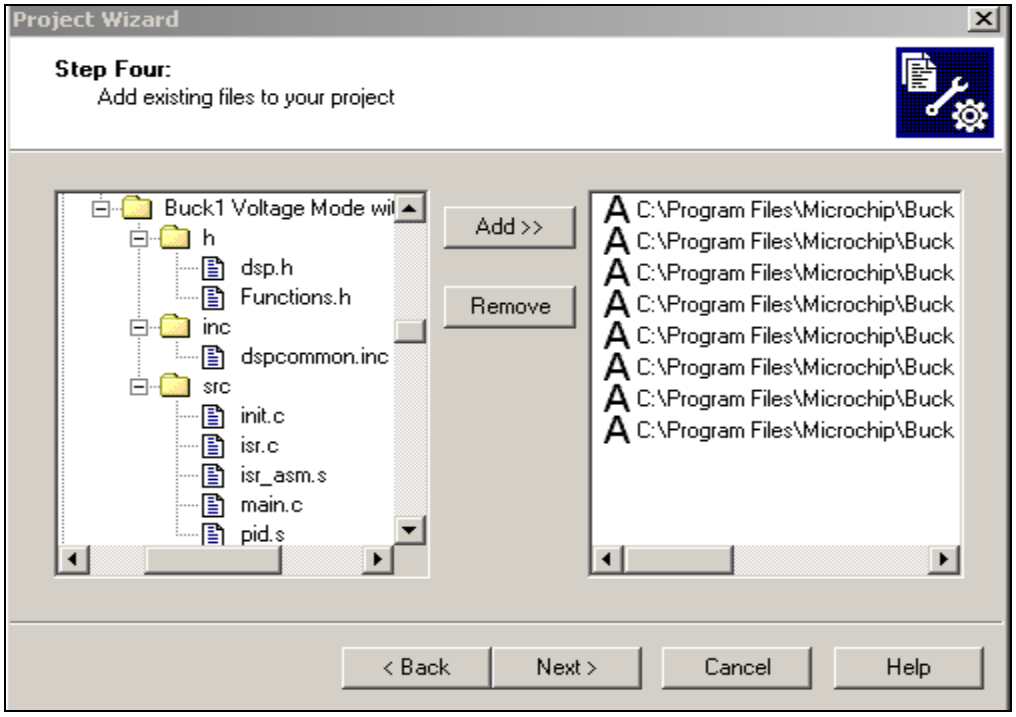

2. Click **Add** to include the files in the project. The selected files appear in the right pane.
3. Click **Next** to continue. The Summary dialog appears as shown in Figure 3-5.

Note: While using the Explorer 16 Development Board, navigate to the following path: `C:\program Files\Microchip\Buck Boost PICtail Plus Board\3-Stage Voltage Mode with Explorer 16`, and select the following files:

- `init.c`
- `isr.c`
- `main.c`
- `dsp.h`
- `function.h`
- `dspcommon.inc`
- `isr_asm.s`
- `pid.s`

© 2008 Microchip Technology Inc.

3.2.1.5 PROJECT SUMMARY

Click **Finish** to complete the project.

FIGURE 3-5: SUMMARY DIALOG

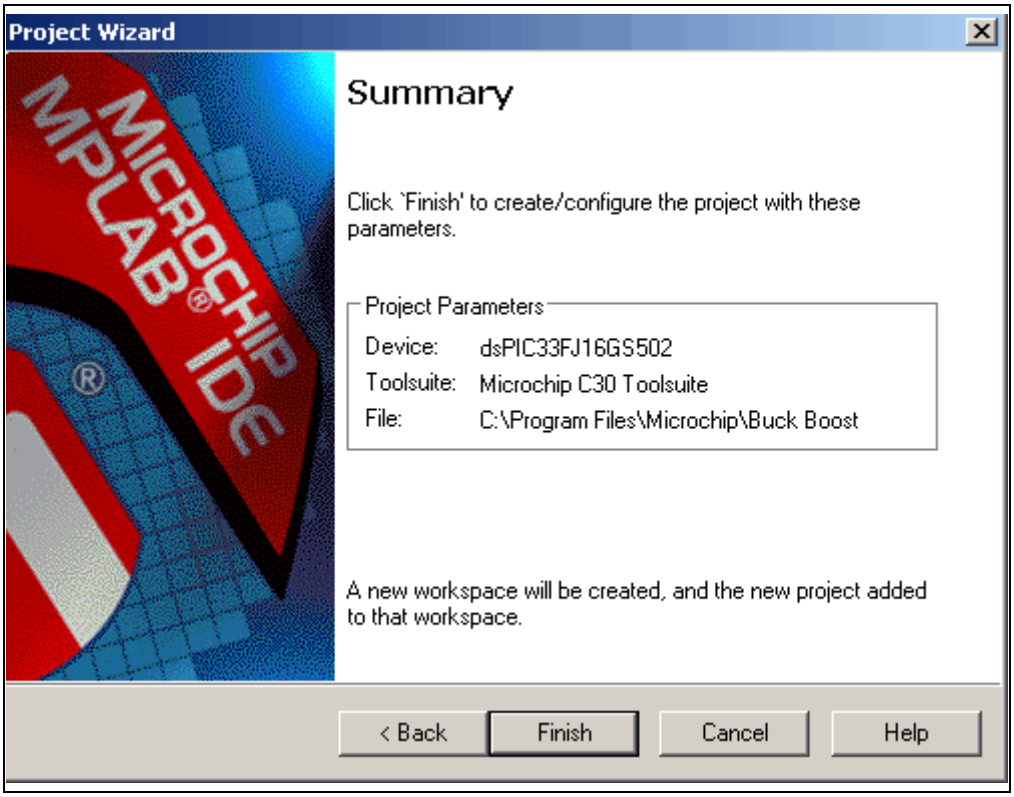

After completing the project wizard, the MPLAB IDE project window lists the following files in the `Source Files` folder:

- `isr.c`
- `main.c`
- `isr_asm.s`
- `pid.s`
- `init.c`

> **Note:** While using the Explorer 16 Development Board, the MPLAB IDE project window lists the following files in the Source Files folder:
>
> - `init.c`
> - `isr.c`
> - `main.c`
> - `isr_asm.s`
> - `pid.s`

3.2.1.6 VIEWING THE PROJECT

1. Click *View>Project* from the MPLAB IDE menu, as shown in Figure 3-6.

FIGURE 3-6: OPEN PROJECT FILE

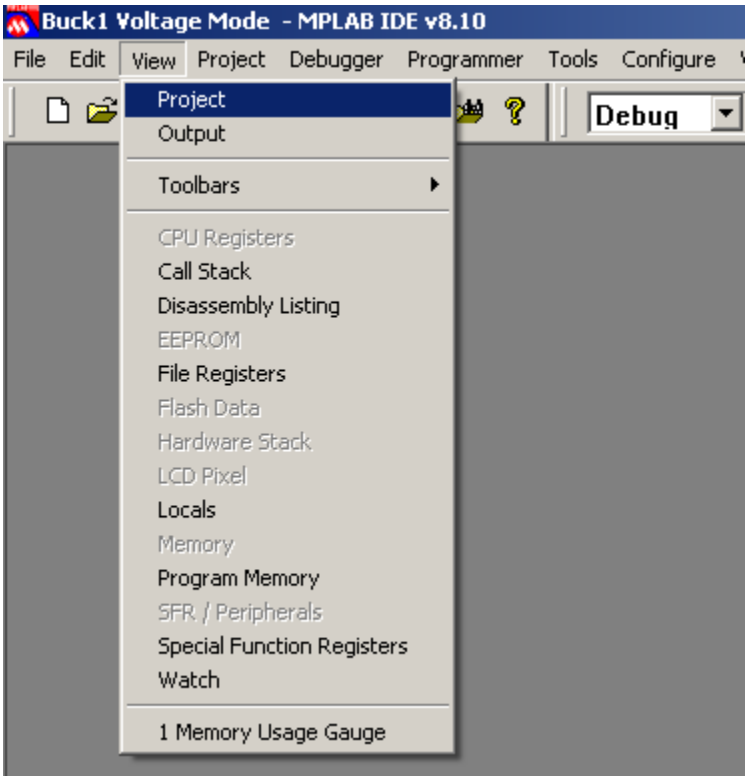

The `Buck1 Voltage Mode.mcw` dialog appears, as shown in Figure 3-7. A project, `Buck1 Voltage Mode.mcp`, and workspace, `Buck1 Voltage Mode.mcp`, are created in MPLAB IDE.

Note: While using the Explorer 16 Development Board, the `3-Stage Voltage Mode.mcp` appears. A `3-Stage Voltage Mode.mcp` project and workspace, `3-Stage Voltage Mode.mcw`, are created in MPLAB IDE.

© 2008 Microchip Technology Inc.

FIGURE 3-7: MPLAB® IDE PROJECT WINDOW

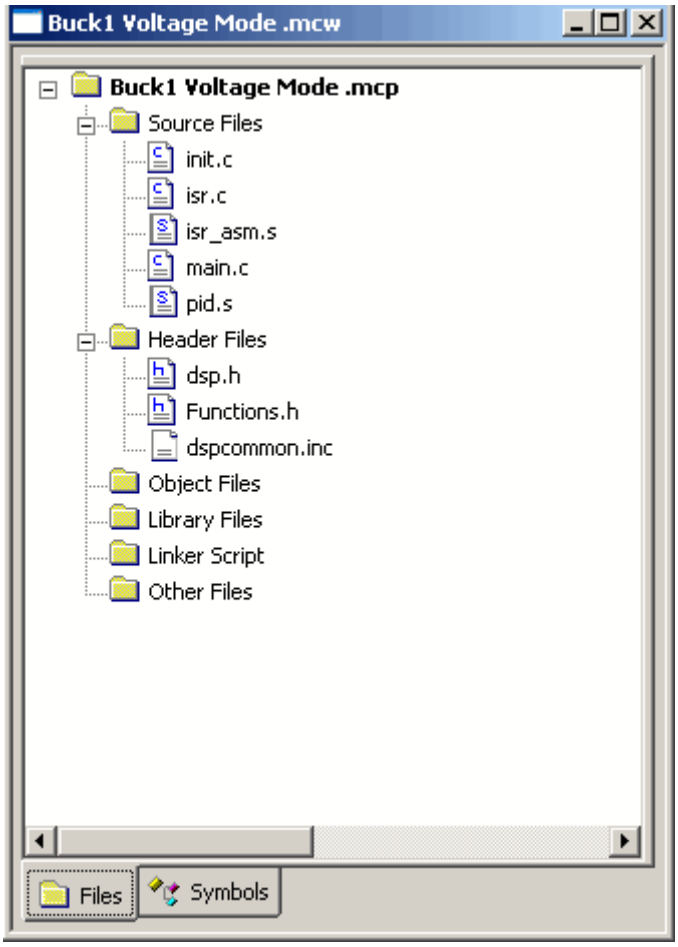

2. Double click the `main.c` file in the project window to open the file. The MPLAB IDE Workspace Window appears, as shown in Figure 3-8. This completes the project view process.

FIGURE 3-8: MPLAB® IDE WORKSPACE WINDOW

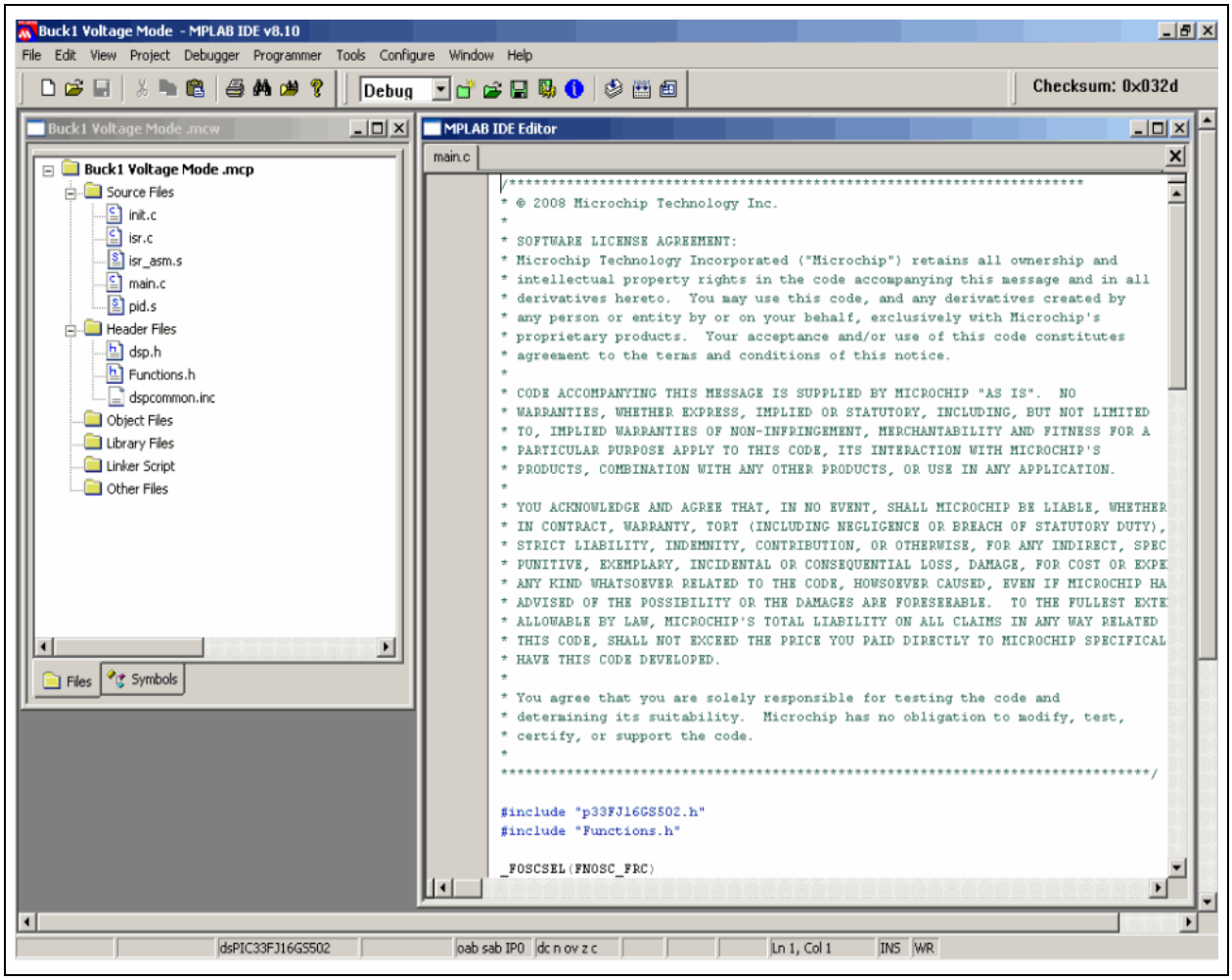

3.3 BUILDING THE CODE

Building the code consists of the following process:

- Assembling all of the `*.c` and `*.s` files to create the respective object files (`*.o`)
- Linking the object files to create the `3-Stage Voltage Mode.hex` and `3-Stage Voltage Mode.cof` output files

The `.hex` file contains the specific data to program the device. The `.cof` file contains additional information to debug at the source code level.

Before building the code, the user must set MPLAB ICD 2 to search for include files and to reserve space for the extra debug code.

© 2008 Microchip Technology Inc.

3.3.1 Building the Code

To specify the Project Build Options:

1. Select *Build Options>Project* from the Project menu. The Build Options For Project “Buck 1 Voltage Mode.mcp” dialog appears, as shown in Figure 3-9.

FIGURE 3-9: BUILD OPTIONS

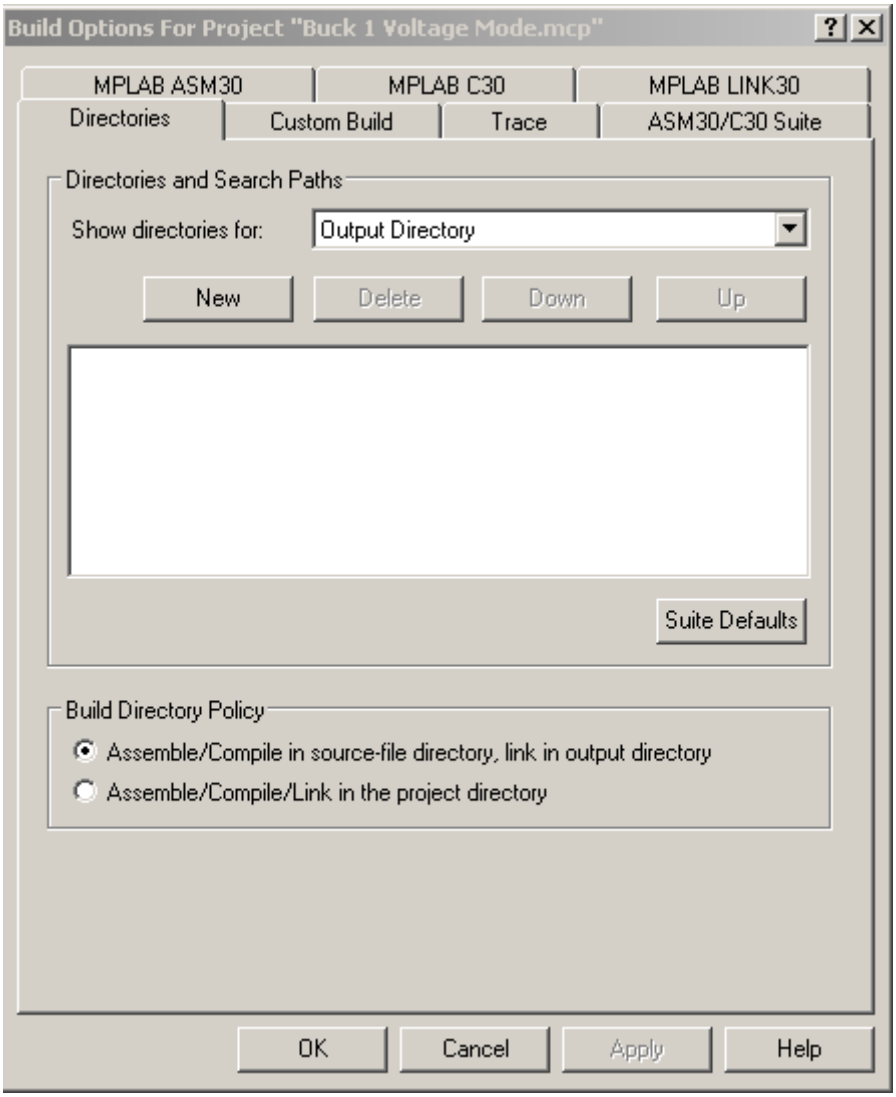

2. Select Assemble/Compile/Link in the project directory, and then click **OK**. This completes the code build process.

3.3.2 Linking the ICD 2 for Debugging

Select the Debug option from the drop-down menu of MPLAB IDE, as shown in Figure 3-10, so the linker will build the code for debugging. This sets aside the RAM for the MPLAB ICD 2 for use during debugging. If this is not performed, the MPLAB ICD 2 will not function properly in Debug mode.

FIGURE 3-10: LINK PROJECT FOR MPLAB® ICD 2

3.3.3 Building the Project

To build the project:

1. Select *Project>Build All* from the MPLAB IDE menu, as shown in Figure 3-11.

FIGURE 3-11: DualBuck MPLAB® IDE SCREEN

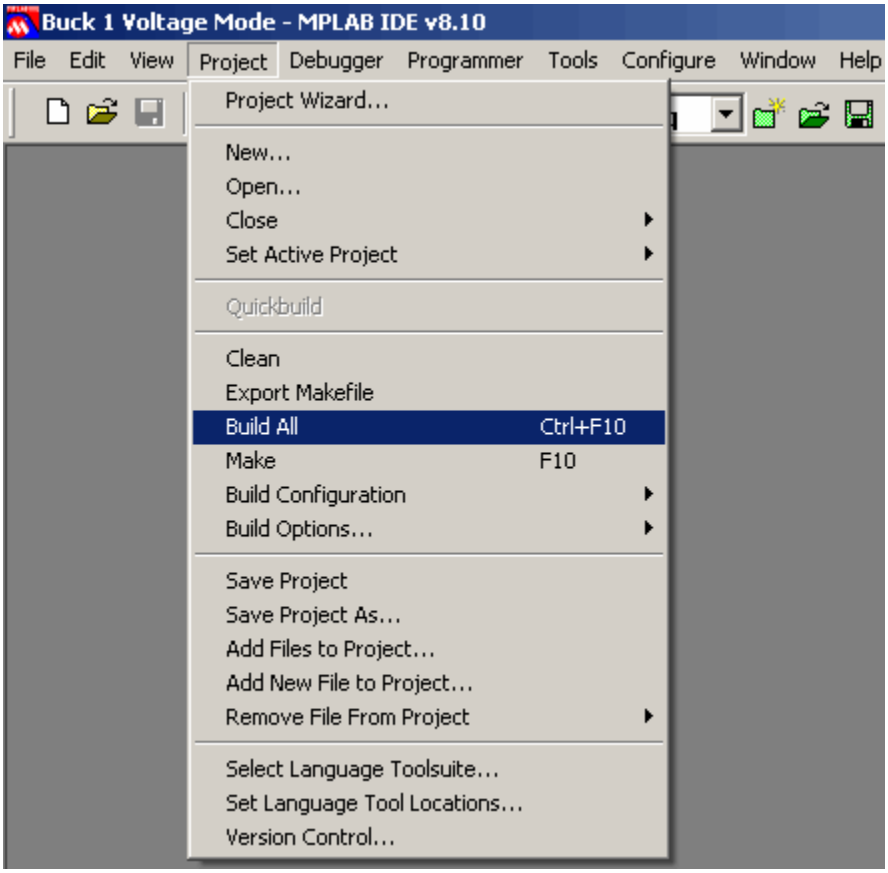

© 2008 Microchip Technology Inc.

2. Observe the progress of the build in the Output window, as shown in Figure 3-12. This completes the project build process.

The device can be programmed if the build status is BUILD SUCCEEDED. If the build status is BUILD FAILED, the build errors that are listed must be resolved.

FIGURE 3-12: BUILD OUTPUT WINDOW

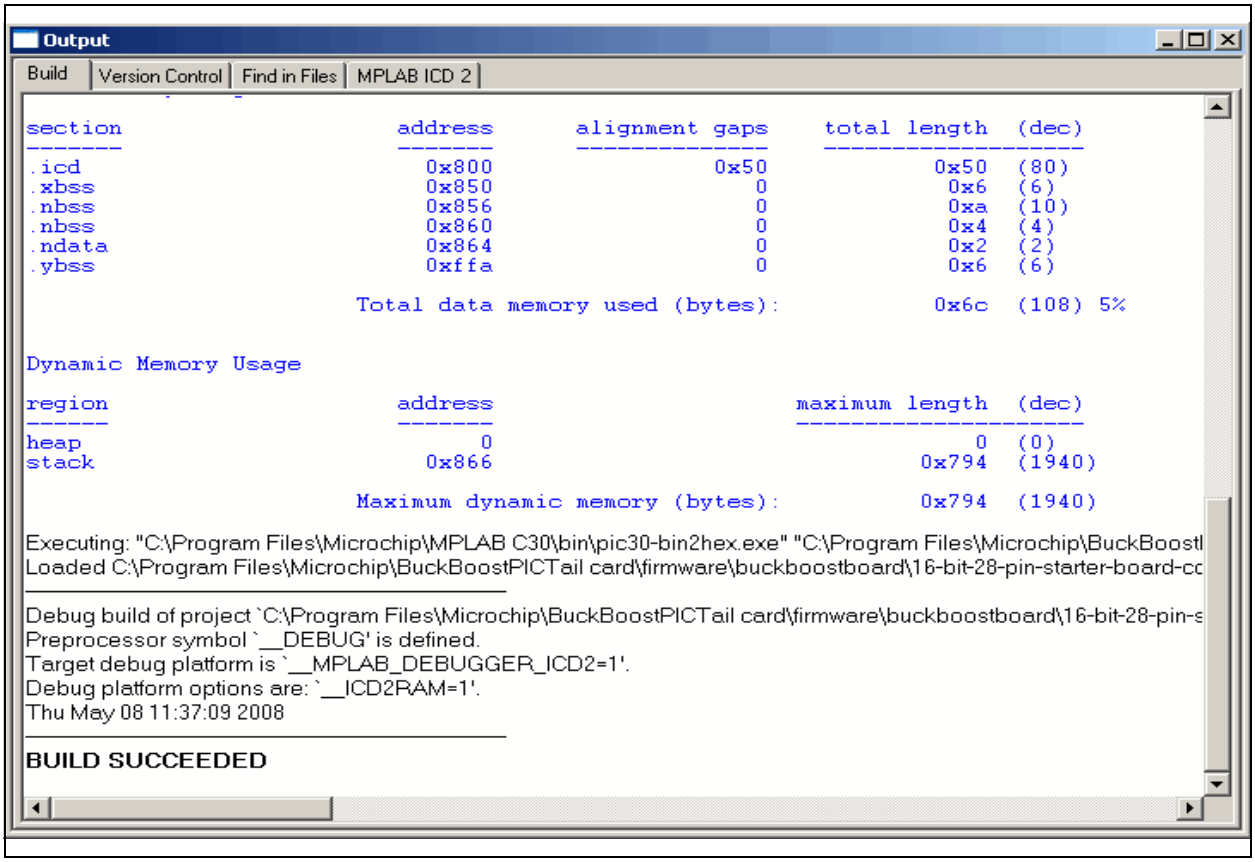

3.4 PROGRAMMING THE DEVICE

The MPLAB ICD 2 In-Circuit Debugger can be used to program and debug the dsPIC33FJ16GS502 device in-circuit on the Daughter Board.

> **Note:** Before proceeding, ensure that the USB driver for the MPLAB ICD 2 is installed on your PC. Refer to the "*MPLAB® ICD 2 In-Circuit Debugger User's Guide*" (DS51331) for details.

3.4.1 Setting up the Device Configuration

1. Select *Configure>Configuration Bits* from MPLAB IDE to display the configuration settings, as shown in Figure 3-13. The Configuration Bits window appears, as shown in Figure 3-14.

FIGURE 3-13: CONFIGURATION MENU

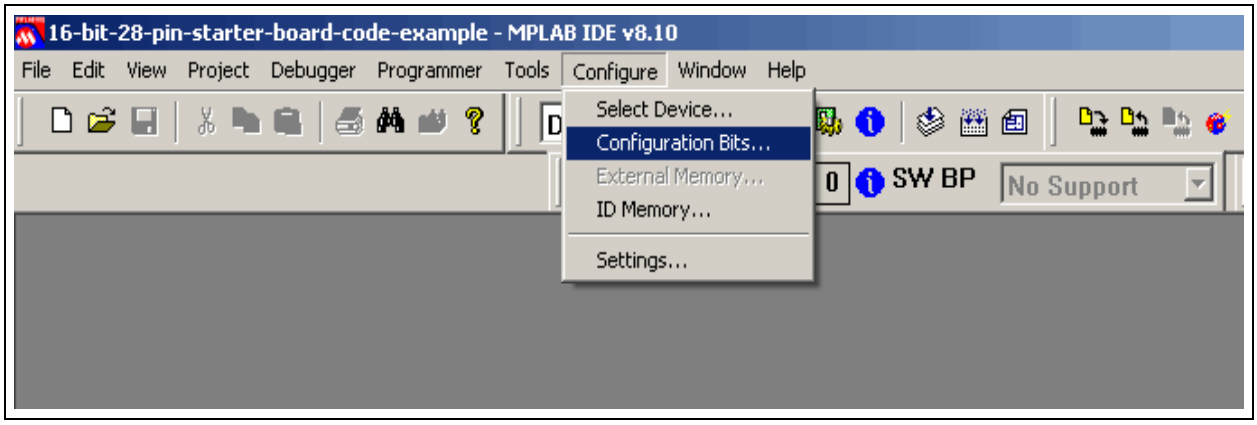

2. Set the Configuration bits as highlighted in Figure 3-14.

FIGURE 3-14: CONFIGURATION SETTINGS

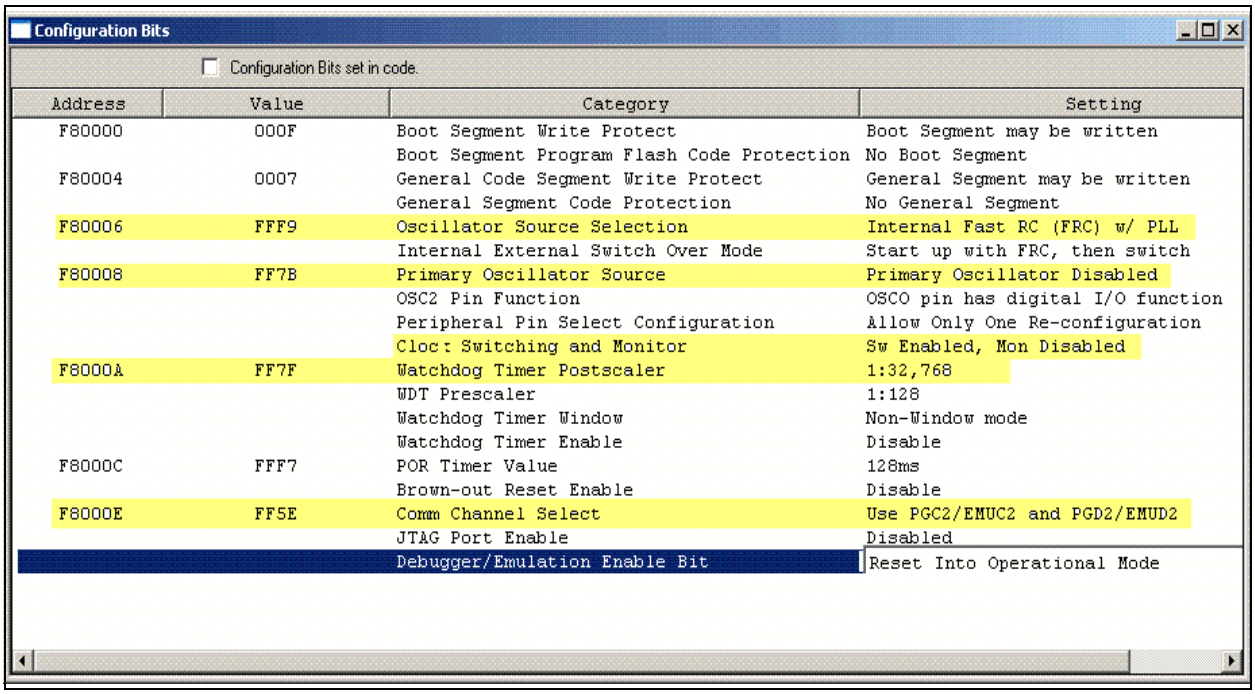

Address	Value	Category	Setting
F80000	000F	Boot Segment Write Protect	Boot Segment may be written
		Boot Segment Program Flash Code Protection	No Boot Segment
F80004	0007	General Code Segment Write Protect	General Segment may be written
		General Segment Code Protection	No General Segment
F80006	FFF9	Oscillator Source Selection	Internal Fast RC (FRC) w/ PLL
		Internal External Switch Over Mode	Start up with FRC, then switch
F80008	FF7B	Primary Oscillator Source	Primary Oscillator Disabled
		OSC2 Pin Function	OSCO pin has digital I/O function
		Peripheral Pin Select Configuration	Allow Only One Re-configuration
		Cloc: Switching and Monitor	Sw Enabled, Mon Disabled
F8000A	FF7F	Watchdog Timer Postscaler	1:32,768
		WDT Prescaler	1:128
		Watchdog Timer Window	Non-Window mode
		Watchdog Timer Enable	Disable
F8000C	FFF7	POR Timer Value	128ms
		Brown-out Reset Enable	Disable
F8000E	FF5E	Comm Channel Select	Use PGC2/EMUC2 and PGD2/EMUD2
		JTAG Port Enable	Disabled
		Debugger/Emulation Enable Bit	Reset Into Operational Mode

© 2008 Microchip Technology Inc.

3.4.2 Connecting the MPLAB ICD 2 In-Circuit Debugger

1. Connect the MPLAB ICD 2 to the PC using the USB cable.
2. Connect the MPLAB ICD 2 to the 16-bit 28-pin Starter Development Board with the short RJ-11 (telephone) cable. Apply +9V power to the 16-bit 28-pin Starter Development Board.

FIGURE 3-15: DAUGHTER BOARD CONNECTED TO MPLAB® ICD 2 IN-CIRCUIT DEBUGGER

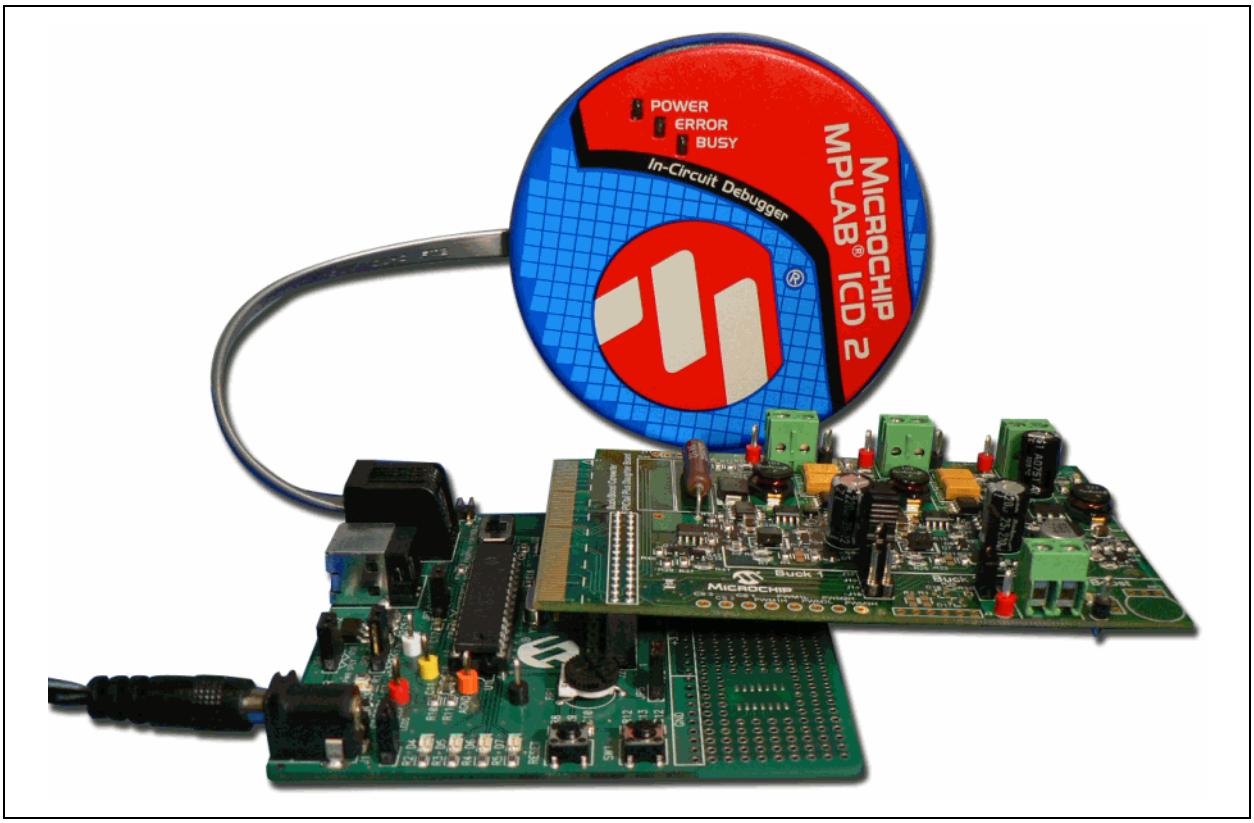

3.4.3 Enabling the MPLAB ICD 2 Connection

1. Select *Debugger>Select Tool>MPLAB ICD 2* to designate the MPLAB ICD 2 as the debug tool in MPLAB IDE, as shown in Figure 3-16.

FIGURE 3-16: SELECTING THE DEBUGGER

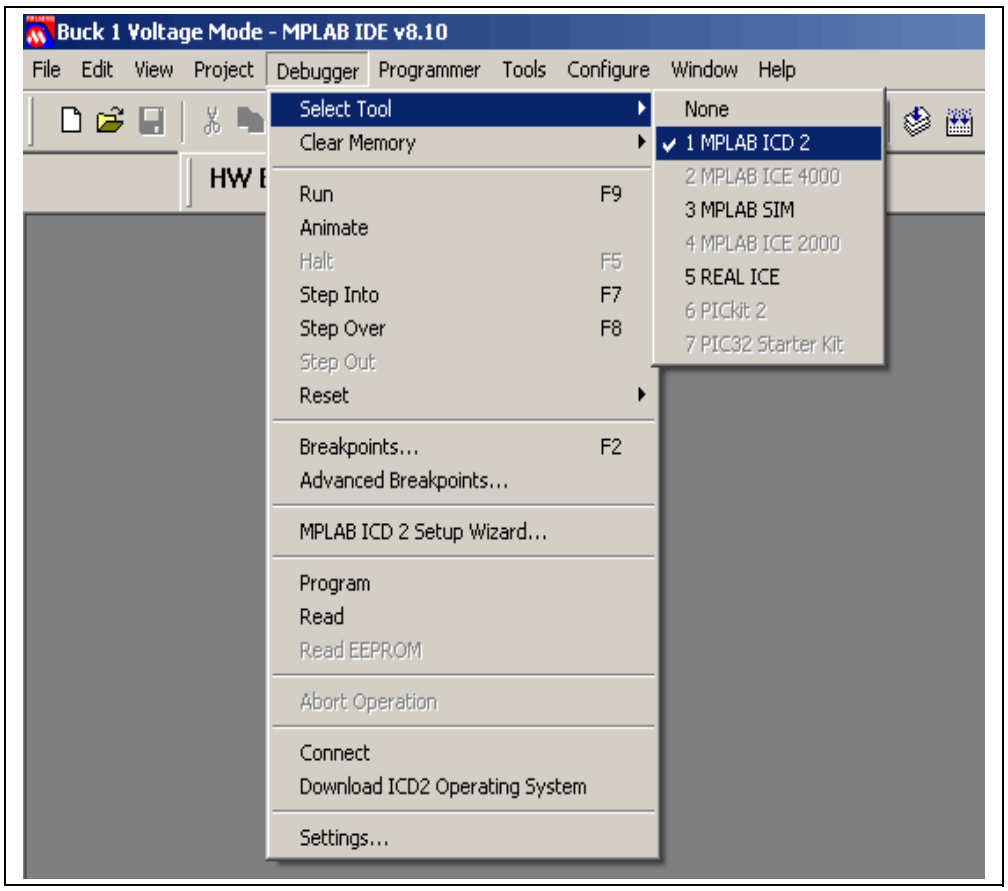

2. Select *Debugger>Connect* to connect the debugger to the device.

   The MPLAB ICD 2 should report that it found the dsPIC33FJ16GS502 device, as shown in Figure 3-17.

© 2008 Microchip Technology Inc.

FIGURE 3-17: ENABLING MPLAB® ICD 2

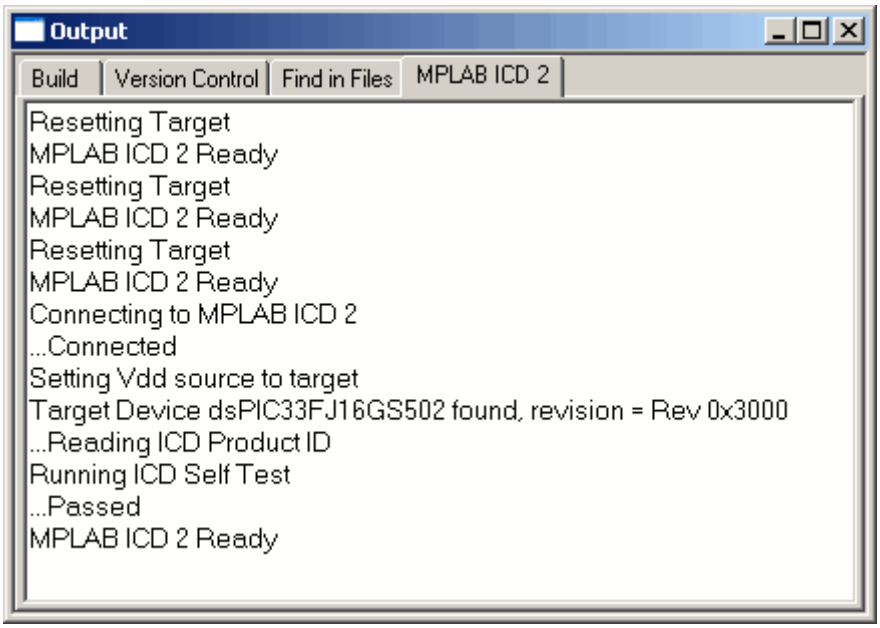

3. Select *Debugger>Settings* to display the MPLAB ICD 2 Debugger settings.
4. Select the **Program** tab on the Debugger settings dialog box.
5. Select the Allow ICD 2 to select memories and ranges radio button, as shown in Figure 3-18. This setting will speed up operations by programming only a small part of the total program memory.

Note: If this is the first time that the MPLAB ICD 2 is being used with a dsPIC33F device, it may need to download the new firmware. If any errors are shown, double click the error message to get more information.

FIGURE 3-18: SETTING PROGRAM MEMORY SIZE

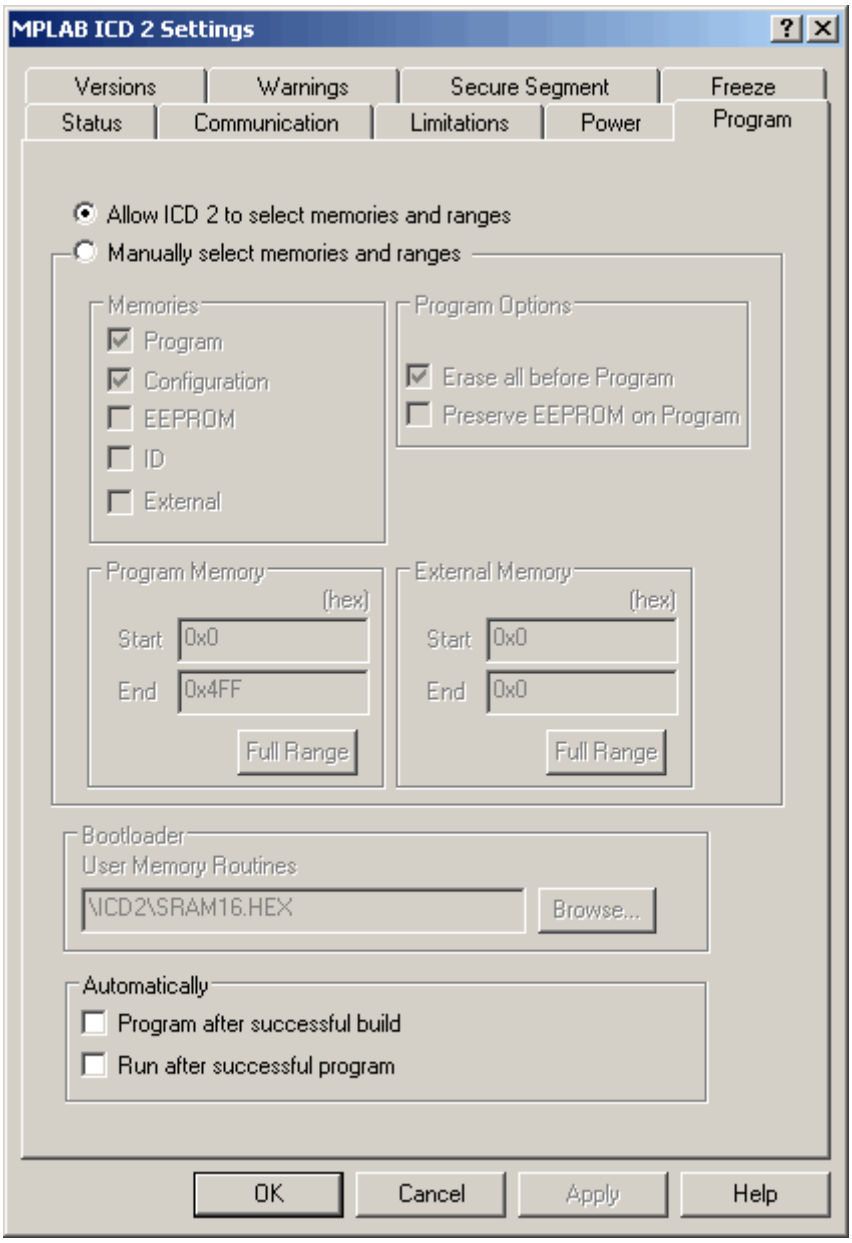

© 2008 Microchip Technology Inc.

3.4.4 Programming the dsPIC33FJ16GS502 Device

To program the device:

1. From the Debugger, select *Debugger>Program*.

   The Output (Program Memory window), as shown in Figure 3-19, displays the program statuses as they appear.

FIGURE 3-19: PROGRAMMING THE dsPIC33FJ16GS502 DEVICE

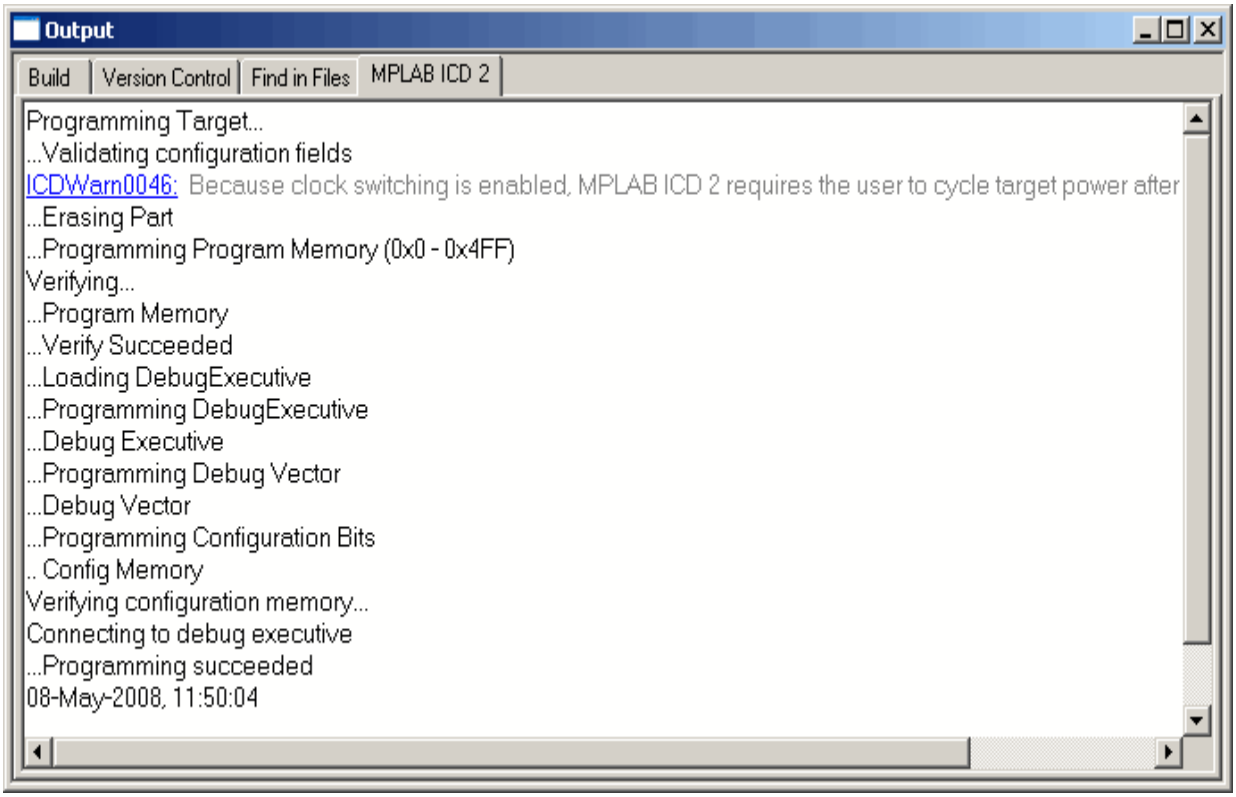

2. Observe the process in the Output window. When MPLAB ICD 2 Ready appears, the device is programmed and ready to run.
3. Select *Debugger>Reset* to reset the code.
4. Select *Debugger>Run* to run the code.

3.5 DEBUGGING THE CODE

The MPLAB ICD 2 In-Circuit Debugger can be used to run, halt, and step the code. A breakpoint can be set to halt the program after the code has executed the instruction at the breakpoint. The contents of the RAM and registers can be viewed whenever the processor has been halted.

The MPLAB ICD 2 In-Circuit Debugger uses the following function keys to access the main debugging functions:

- <F5> – Halt
- <F6> – Reset
- <F7> – Single Step
- <F9> – Run

In addition to these, there are more functions accessible by right clicking on a line of source code. The most important of these are "Set Breakpoint" and "Run to Cursor".

3.5.1 Displaying the Code

To display the code:

1. Select *View>Program Memory*.
2. From the Program Memory window, select the **Symbolic** tab, as shown in Figure 3-20.

FIGURE 3-20: PROGRAM MEMORY WINDOW

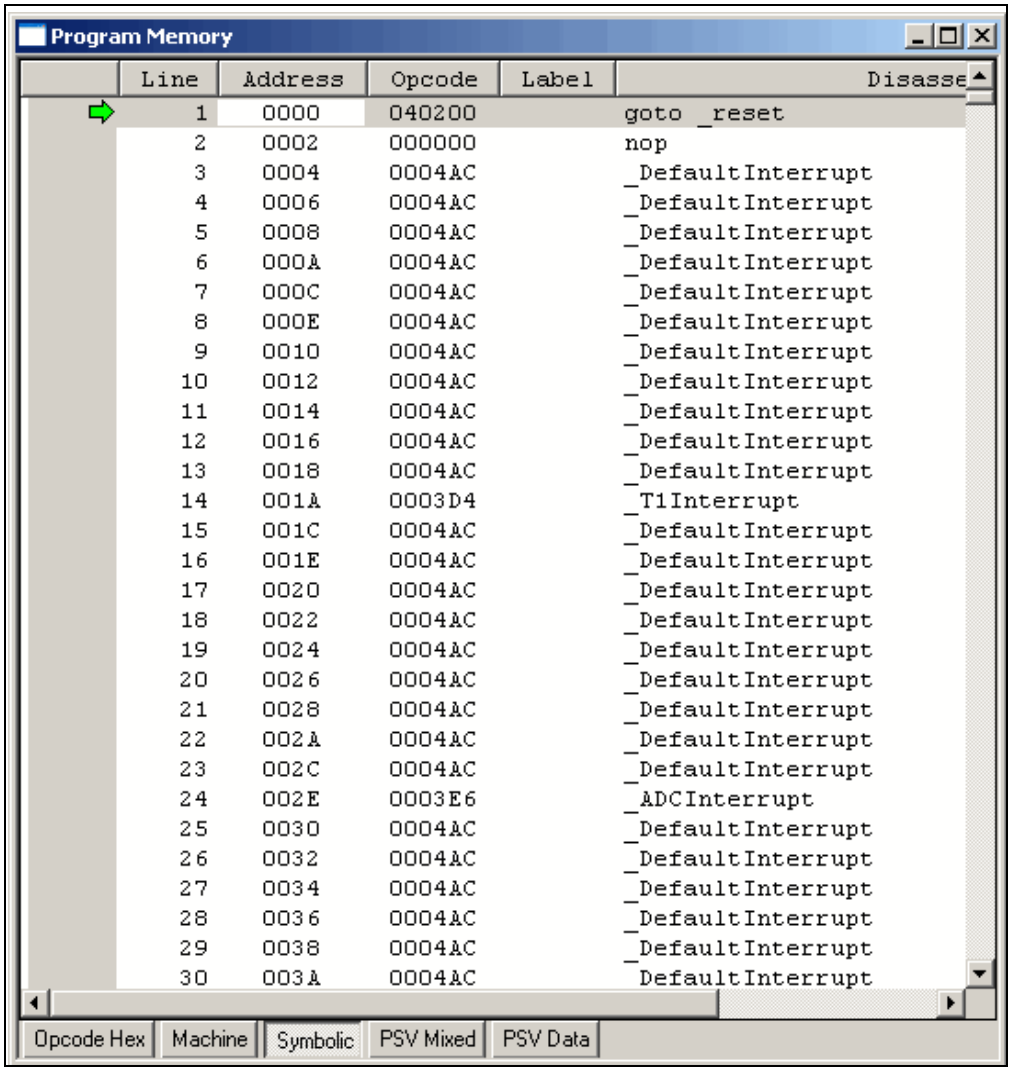

© 2008 Microchip Technology Inc.

3. Press <**F5**> to halt the processor and press <**F6**> to reset the processor. The Program Memory now displays a green arrow pointing to the line of code at address 0.

The instruction at this location is `goto 0x000100`. This code is added by the linker to make the program branch to the start of the code in the `main.c` file. The executable code starts from location 0x000100.

3.5.2 Stepping the Program

To step the program:

1. Press <**F7**> to single step the code. The green arrow now points to the code below `ACLKCONbits.ENAPLL = 1;` in the `main.c` source code, as shown in Figure 3-21.

FIGURE 3-21: SOURCE CODE WINDOW

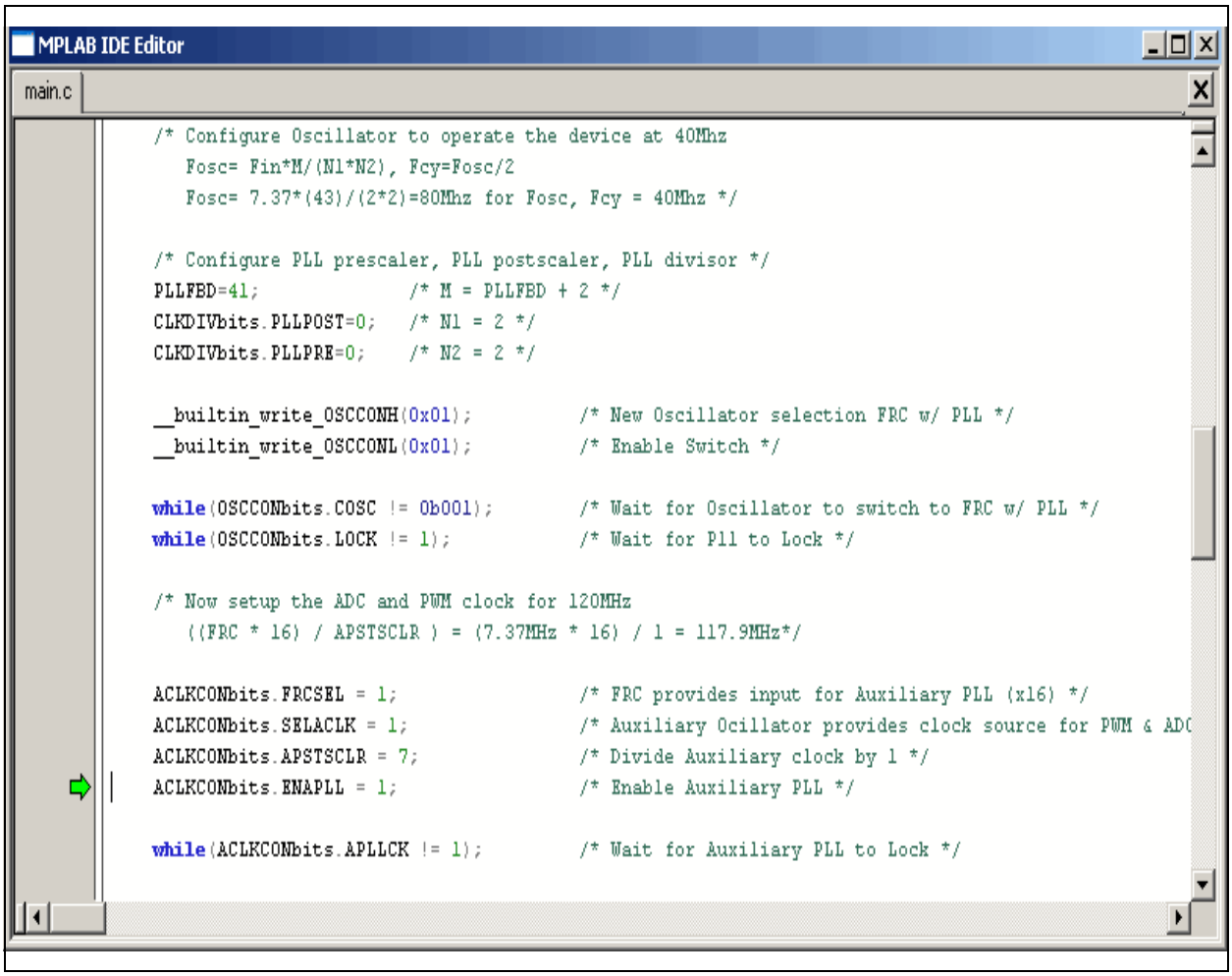

2. Right click the instruction up to which the code is to be executed and select Run to Cursor.

   The program is executed up to the instruction selected.

3. Select *View>Watch*. The Watch window appears, as shown in Figure 3-22.

FIGURE 3-22: WATCH WINDOW

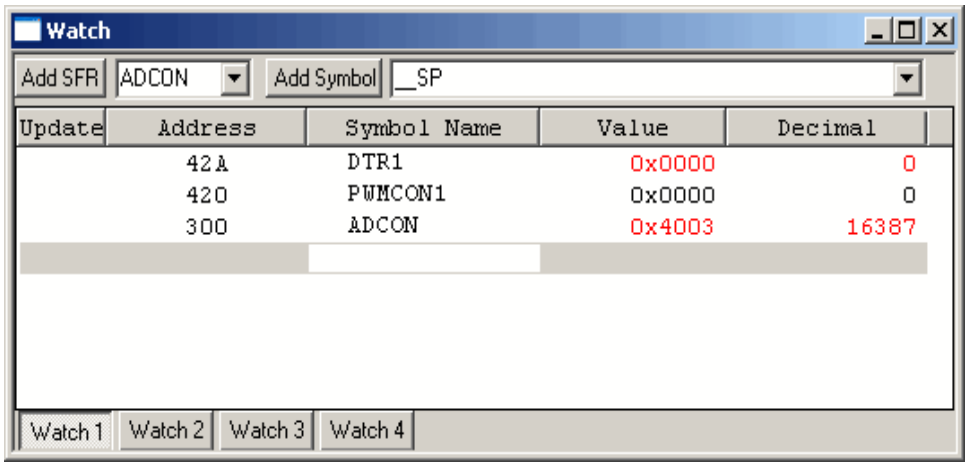

4. Select DTR1 from the Add SFR drop-down list and click **Add SFR** to add the DTR1 register in the Watch window.
5. Select PWMCON1 from the Add SFR drop-down list and click **Add SFR** to add the PWMCON1 register in the Watch window.
6. Select ADCON from the Add SFR drop-down list and click **Add SFR** to add the ADCON register in the Watch window.

You will be able to see these registers change as you step through the code.

3.5.3 Setting the Breakpoint

1. To set a breakpoint, right click a line of code and select Set Breakpoint from the pop-up menu.

   For example, find the following line of code and set a breakpoint on this line:

   ```
   ACLKCONbits.FRCSEL = 1;
   ```

   A red octagonal shape marked with a B appears in the gutter (gray bar on the left) of the source code window to designate the breakpoint location, as shown in Figure 3-23.

© 2008 Microchip Technology Inc.

FIGURE 3-23: SETTING BREAKPOINT

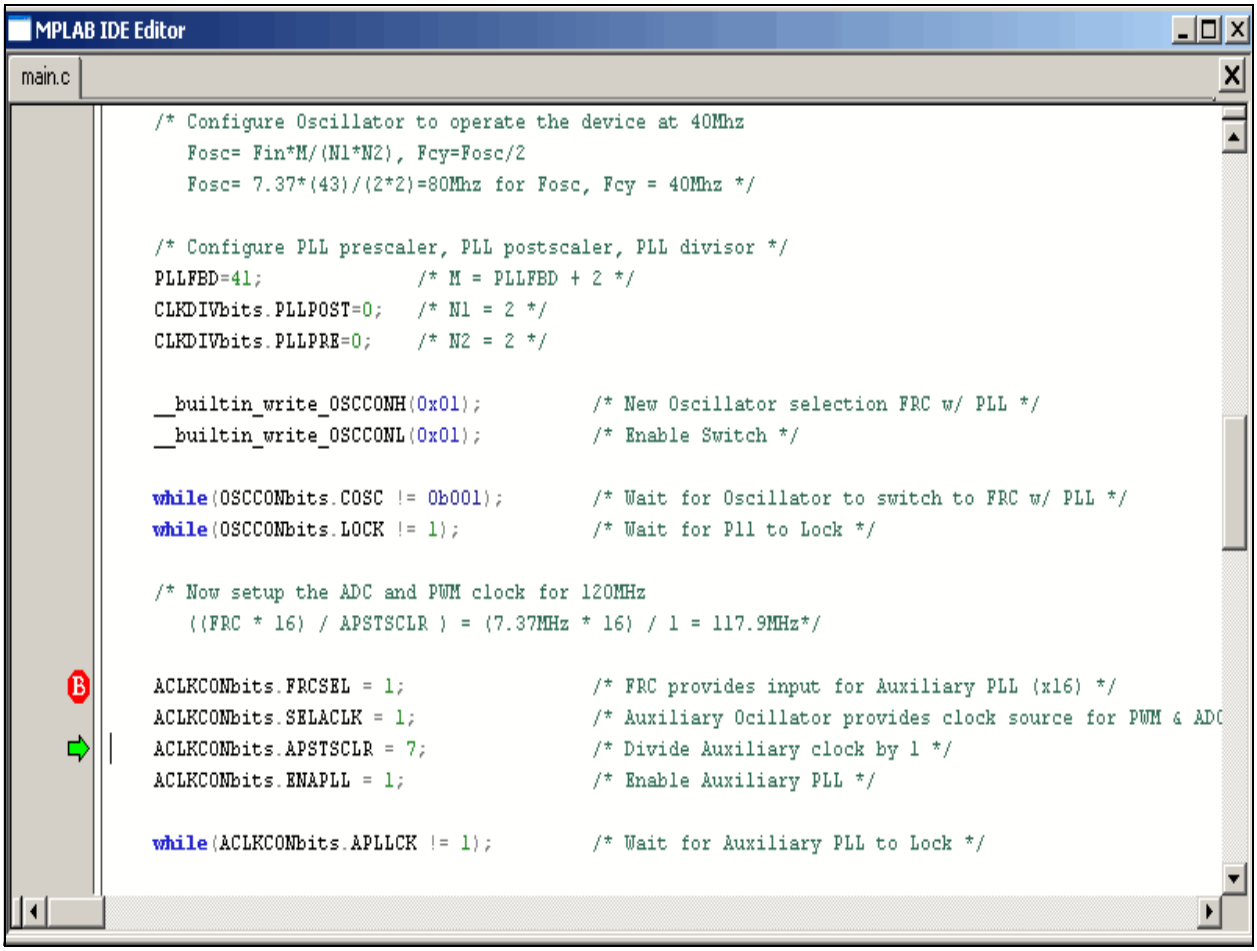

2. Press **<F9>** to run the code.

   The program halts on the instruction following the breakpoint.

> **Note:** An alternate method to set a breakpoint is to simply double click the line. This feature may need to be enabled using the *Edit>Properties* menu.

NOTES:

© 2008 Microchip Technology Inc.

Chapter 4. Demonstration Program Operation

The Buck/Boost Converter PICtail Plus Daughter Board CD supplied with the Buck/Boost Converter PICtail Plus Daughter Board consists of the source code for the 16-bit 28-pin Starter Development Board (Buck 1 stage only) and Explorer 16 Development Board (Buck 1, Buck 2 and Boost stages). To demonstrate a program that illustrates PID control of the output voltage on the Daughter Board, program the device with respective source code, available on the Daughter Board's CD, specified in **Section 3.2 "Creating the Project"**. The code can also be downloaded from the Microchip web site (http://www.microchip.com).

The following topics are included in this chapter:

- Program Demonstration
- Code Demonstration
- Other Code Examples

4.1 PROGRAM DEMONSTRATION

The demonstration program provides simultaneous closed-loop control of the output voltages.

The PID control scheme consists of the following parameters:

- **Proportional Error Gain (P-Gain)** – This parameter produces a correction factor that is proportional to the magnitude of the output voltage error.
- **Integral Error Gain (I-Gain)** – This parameter uses the cumulative voltage error to generate a correction factor that eliminates any residual error due to limitations in offset voltages and measurement resolution.
- **Derivative Error Gain (D-Gain)** – This parameter produces a correction factor that is proportional to the rate of change of the output error voltage, which helps the system respond quickly to changes in system condition.

Additional control parameters that the user can add to P, I and D Gain terms are as follows:

- **Second Derivative, or Jerk Error, Gain (J-Gain)** – This parameter produces a correction factor that is proportional to the change in the differential error (i.e., the derivative of the derivative). J-Gain is a high frequency term that tends to provide quick response to an impulse event.
- **Feed Forward Gain** – This parameter produces a correction factor based on the desired output voltage that is computed based on the magnitude of the input voltage, inductor current, and circuit attributes (i.e., inductor and capacitor values). This term allows the control loop to be proactive rather than reactive. In other words, when the input voltage changes, feed forward gain responds so that the control loop does not have to wait until the output voltage changes before making the appropriate gain correction.

- **Dead-Time Gain** – This parameter produces a correction factor that compensates for the fact that the feed forward gain term does not account for the energy lost due to the dead time of the PWM signal (the time when both MOSFETs are off).
- **Current-Limit Gain** – This parameter limits the cumulative control gain when the current is approaching its upper limit.

After the modifications have been made to the 16-bit 28-pin Starter Development Board, as specified in **Section 2.4 "Using the Daughter Board with the 16-bit 28-pin Starter Development Board"**, do the following:

- Connect the power supply
- Connect the MPLAB ICD 2
- Connect the Buck/Boost Converter PICtail Plus Daughter Board
- Connect the 9V power supply to the 16-bit 28-pin Starter Development Board as shown in Figure 2-5

Instructions for programming the dsPIC33FJ16GS502 SMPS device are provided in the Readme file of the respective software folder. **Chapter 4. "Demonstration Program Operation"** also describes how to program the dsPIC33FJ16GS502 device using the MPLAB ICD 2. Figure 4-1 illustrates the program flow of the demonstration program.

> **Note:** While using the Explorer 16 Development Board with the Daughter Board, the output voltages Buck1+, Buck2+ and Boost+ can be verified by measuring at output terminals J4, J5 and J8 respectively.

FIGURE 4-1: SMPS DEMONSTRATION PROGRAM FLOW CHART

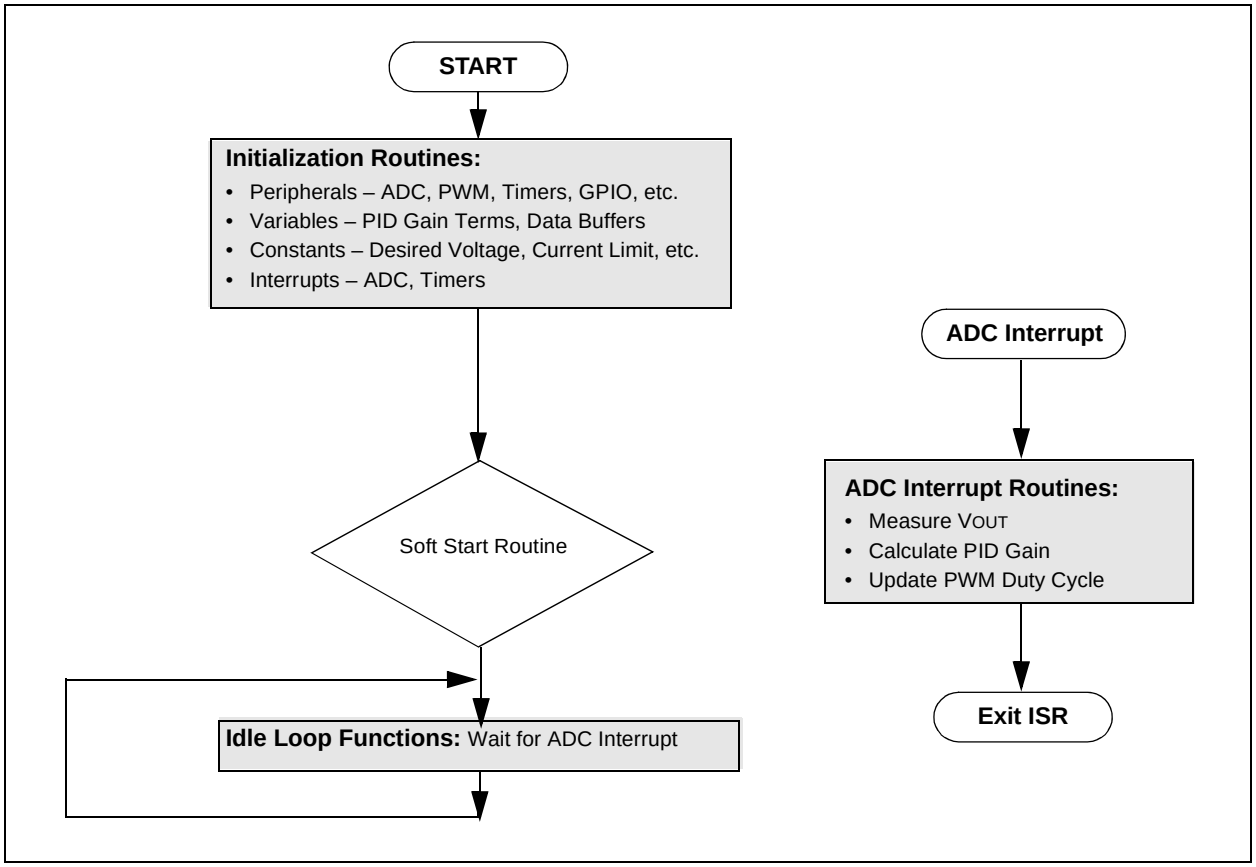

© 2008 Microchip Technology Inc.

4.2 CODE DEMONSTRATION

4.2.1 System Initialization

When power is applied to the board, the program starts by executing the following system initialization routines:

- **Peripherals** – The required peripherals (PWM, ADC, Timers and GPIO) are configured and enabled.
- **Variables** – Program variables are defined. RAM locations and register usage are defined and documented.
- **Constants** – Program constants are defined including reference set points for both VOUT1 and VOUT2, input voltage, current limits, fault conditions, PWM periods and Timer periods.
- **Interrupts** – The ADC and Timer Interrupts are set up and enabled.
- **System Stabilization** – All outputs are discharged to ensure a stable value at start-up.

4.2.2 Fault Check

The program checks the ADC for input undervoltage and output overvoltage conditions. If a fault occurs, the PWM outputs are disabled until the fault condition is cleared. If no fault is detected, the program proceeds.

4.2.3 Soft Start

The Soft Start Routine ramps up the output voltage in an open-loop fashion to bring the system within the operating range of the PID control loop. This routine ensures that the output does not overshoot the desired voltage. It also limits the current at start-up.

4.2.4 ADC Interrupt

The ADC Interrupt is the heart of the demo program. This routine takes up approximately 75% of the execution time. It performs all the PID calculations and applies any needed corrections to the output.

4.2.5 System Idle Loop

Note 1:	The ADC Interrupt can occur any time during program execution.
2:	The ADC Interrupt takes priority over any other tasks that the program is performing.

All auxiliary functions are performed in the system idle routine. This is the time available to the CPU while the demo program is waiting for an ADC Interrupt. Non-critical functions can be performed in this loop. During this time the input voltage, fault timers and Soft Start flag are checked.

4.3 OTHER CODE EXAMPLES

There are several other code examples are available on the Microchip website. Refer to the Readme files located in each code example folder for details on what each code example demonstrates. Check the Microchip web site (http://www.microchip.com) for the latest updates to the code examples and for additional code examples.

NOTES:

© 2008 Microchip Technology Inc.

Appendix 1. Schematics and Layouts

This appendix provides the board layout followed by schematics for the Buck/Boost Converter PICtail Plus Daughter Board.

FIGURE 1-1: BOARD LAYOUT

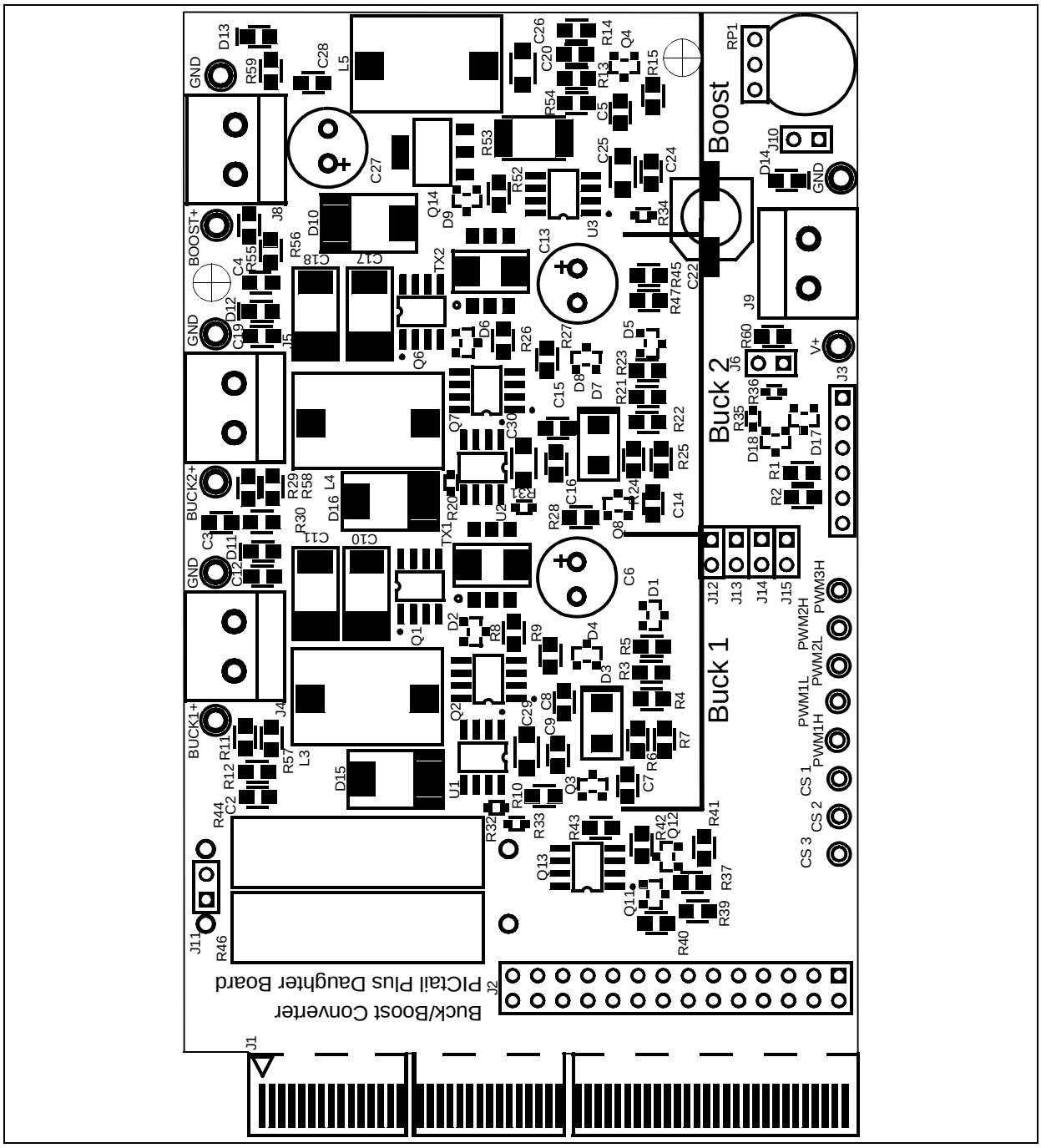

FIGURE 1-2: DAUGHTER BOARD SCHEMATIC 1 OF 5

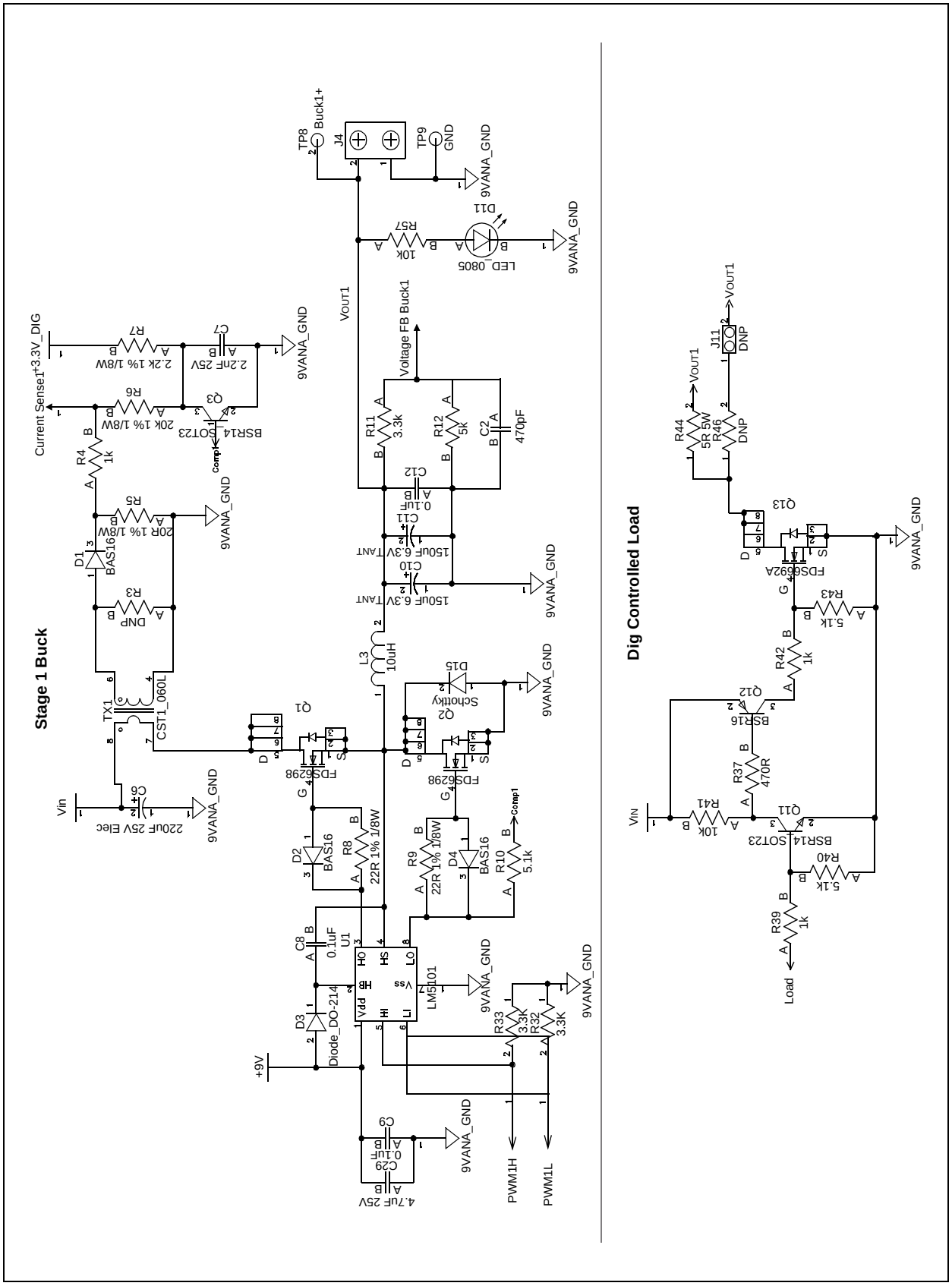

© 2008 Microchip Technology Inc.

FIGURE 1-3: DAUGHTER BOARD SCHEMATIC 2 OF 5

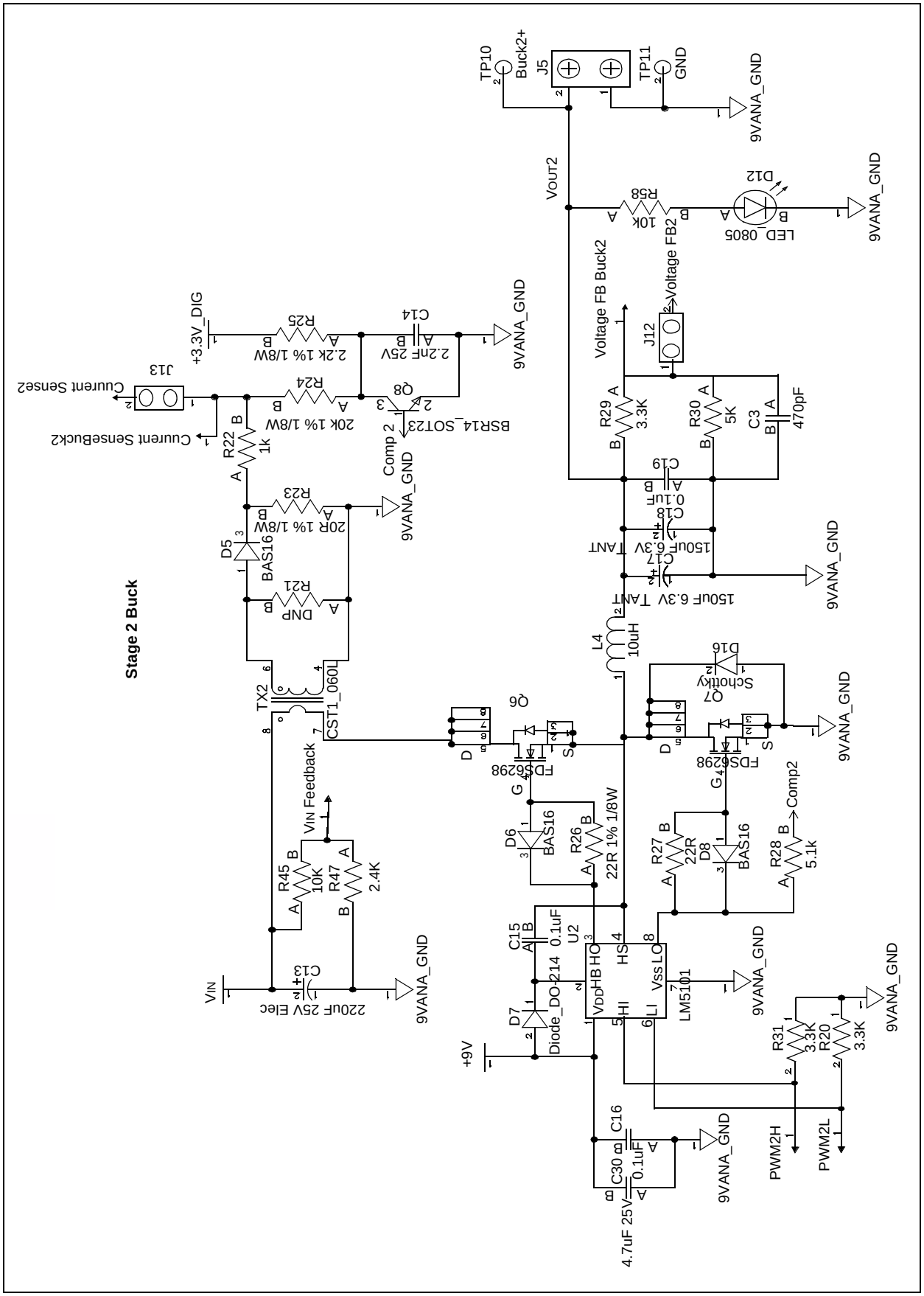

FIGURE 1-4: DAUGHTER BOARD SCHEMATIC 3 OF 5

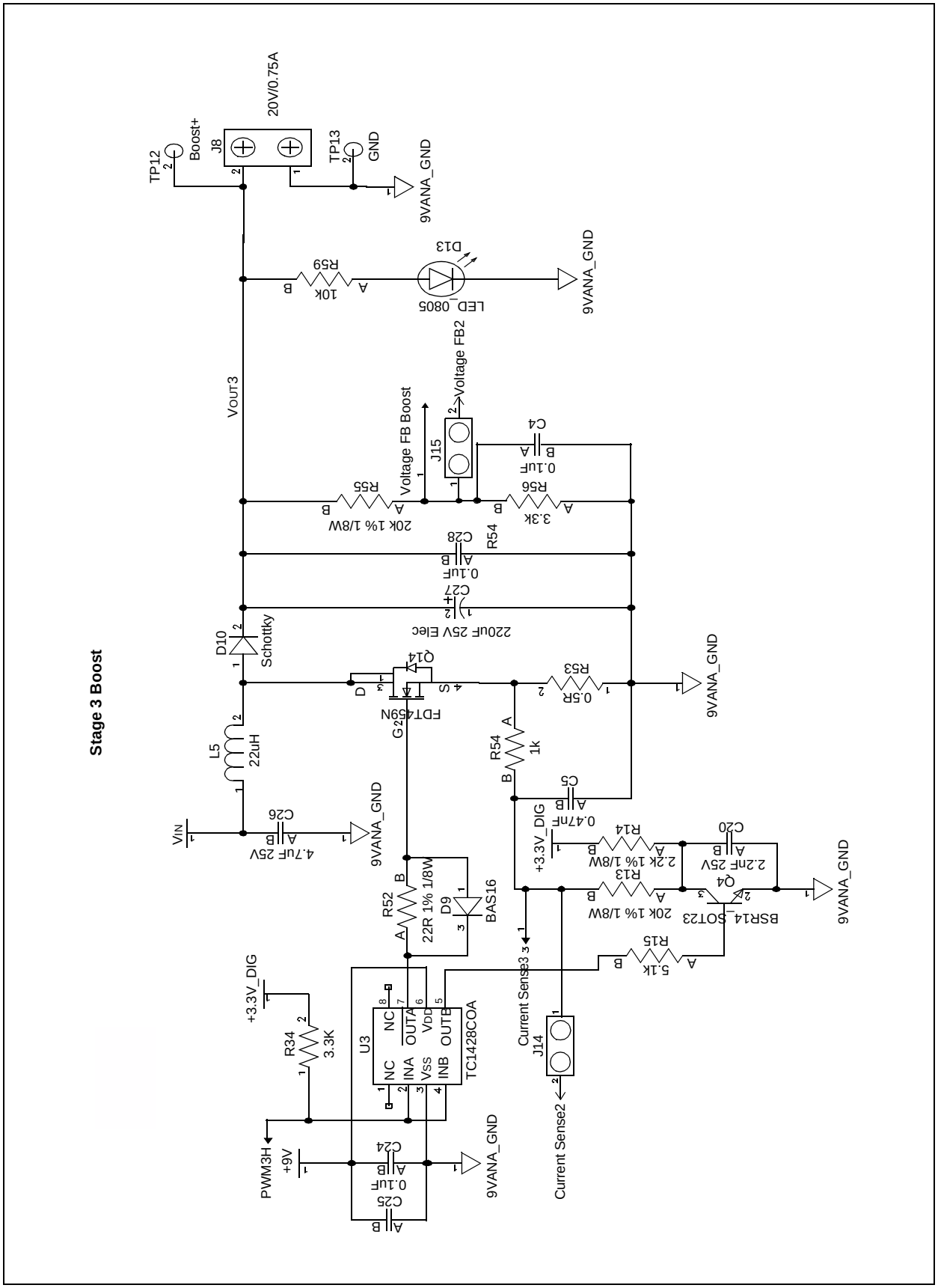

© 2008 Microchip Technology Inc.

FIGURE 1-5: DAUGHTER BOARD SCHEMATIC 4 OF 5

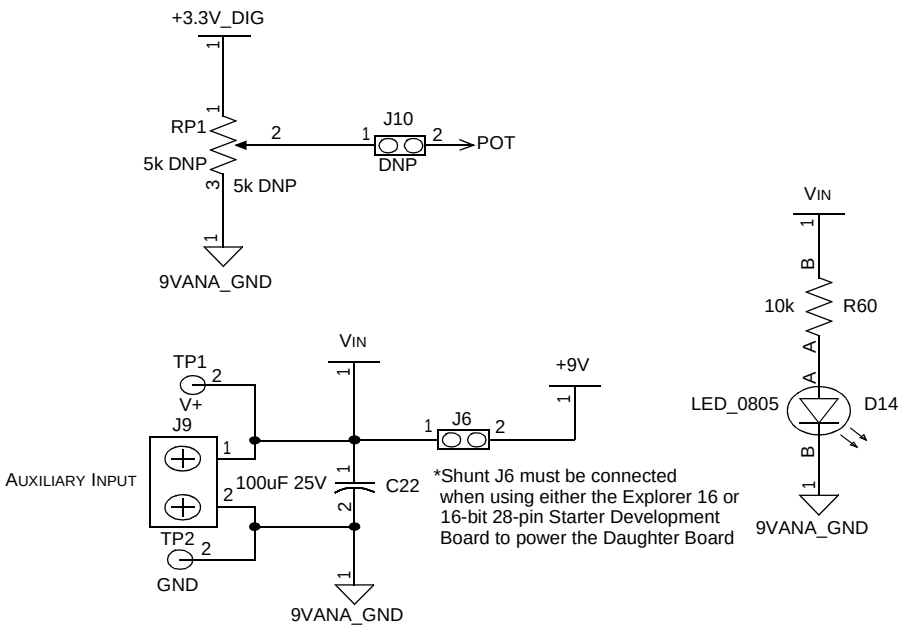

FIGURE 1-6: DAUGHTER BOARD SCHEMATIC 5 OF 5

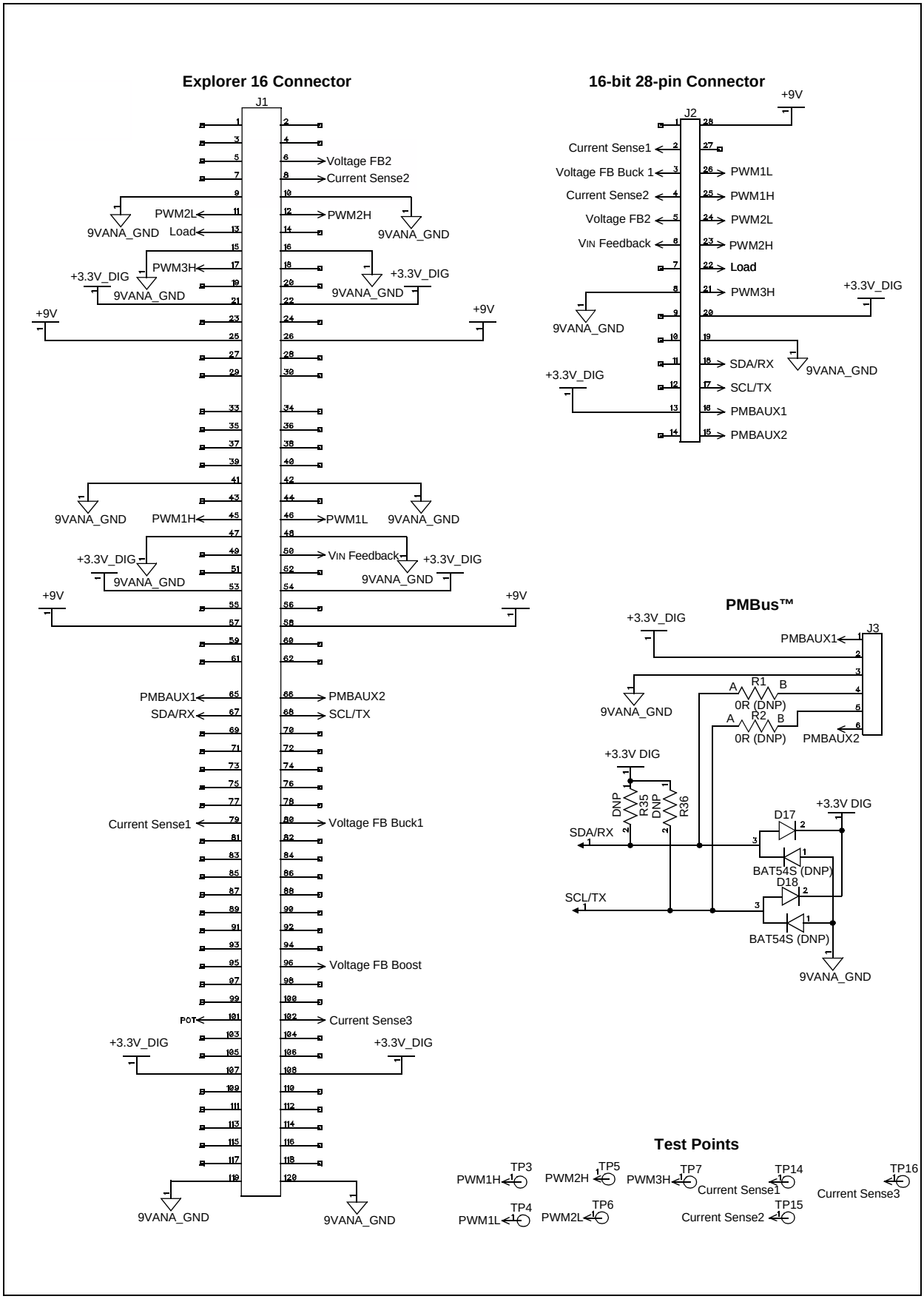

© 2008 Microchip Technology Inc.

Index

A

ADC Interrupt 51
Additional Features 11

B

Boost Converter 7, 24
Buck Converter 7
Buck1 Converter 24
Buck2 Converter 24

C

Code Build Process 34
Code Demonstration 51
Connectors
- 16-bit 28-pin Starter Development Board 16
- Daughter Board 13
- Explorer 16 Development Board 17

Current-Limit Gain 50
Customer Notification Service 4
Customer Support 5

D

Daughter Board Block Diagram 7
Daughter Board Power 11
DC/DC Synchronous Buck Converter 7
DC/DC Synchronous Buck Converters 7
Dead Time Gain 50
Derivative Error Gain (D-Gain) 49
Documentation
- Conventions 2
- Layout 1

F

Fault Check 51
Feed Forward Gain 49
Feedback Signal Test Points 19

I

Integral Error Gain (D-Gain) 49
Internet Address 4

J

Jerk Error Gain 49
Jumpers 18

M

Microchip Internet Web Site 4
MPLAB ICD 2
- Keyboard Shortcuts 44
- Programming the Device 43
- Project Build Options 35

MPLAB IDE
- Building a Project 36
- Project Wizard 26
  - Completing a Project 31
  - Project files 31
  - Selecting the Device 27

P

PMBus Interface Connector 15
Potentiometer and LED 18
Power Stages 11
Power Test Points 19
Proportional Error Gain (P-Gain) 49
Proportional-Integral-Derivative (PID) 7
PWM Test Points 19

R

Reading, Recommended 3
Readme 3

S

Second Derivative Gain (J-Gain) 49
Soft Start 51
Switch Mode Power Supply (SMPS) 7
System Initialization Routines 51
- Constants 51
- Interrupts 51
- Peripherals 51
- Soft Start 51
- System Stabilization 51
- Variables 51

T

Test Points 19

W

Warranty Registration 3
WWW Address 4

WORLDWIDE SALES AND SERVICE

AMERICAS

Corporate Office
2355 West Chandler Blvd.
Chandler, AZ 85224-6199
Tel: 480-792-7200
Fax: 480-792-7277
Technical Support:
http://support.microchip.com
Web Address:
www.microchip.com

Atlanta
Duluth, GA
Tel: 678-957-9614
Fax: 678-957-1455

Boston
Westborough, MA
Tel: 774-760-0087
Fax: 774-760-0088

Chicago
Itasca, IL
Tel: 630-285-0071
Fax: 630-285-0075

Dallas
Addison, TX
Tel: 972-818-7423
Fax: 972-818-2924

Detroit
Farmington Hills, MI
Tel: 248-538-2250
Fax: 248-538-2260

Kokomo
Kokomo, IN
Tel: 765-864-8360
Fax: 765-864-8387

Los Angeles
Mission Viejo, CA
Tel: 949-462-9523
Fax: 949-462-9608

Santa Clara
Santa Clara, CA
Tel: 408-961-6444
Fax: 408-961-6445

Toronto
Mississauga, Ontario,
Canada
Tel: 905-673-0699
Fax: 905-673-6509

ASIA/PACIFIC

Asia Pacific Office
Suites 3707-14, 37th Floor
Tower 6, The Gateway
Harbour City, Kowloon
Hong Kong
Tel: 852-2401-1200
Fax: 852-2401-3431

Australia - Sydney
Tel: 61-2-9868-6733
Fax: 61-2-9868-6755

China - Beijing
Tel: 86-10-8528-2100
Fax: 86-10-8528-2104

China - Chengdu
Tel: 86-28-8665-5511
Fax: 86-28-8665-7889

China - Hong Kong SAR
Tel: 852-2401-1200
Fax: 852-2401-3431

China - Nanjing
Tel: 86-25-8473-2460
Fax: 86-25-8473-2470

China - Qingdao
Tel: 86-532-8502-7355
Fax: 86-532-8502-7205

China - Shanghai
Tel: 86-21-5407-5533
Fax: 86-21-5407-5066

China - Shenyang
Tel: 86-24-2334-2829
Fax: 86-24-2334-2393

China - Shenzhen
Tel: 86-755-8203-2660
Fax: 86-755-8203-1760

China - Wuhan
Tel: 86-27-5980-5300
Fax: 86-27-5980-5118

China - Xiamen
Tel: 86-592-2388138
Fax: 86-592-2388130

China - Xian
Tel: 86-29-8833-7252
Fax: 86-29-8833-7256

China - Zhuhai
Tel: 86-756-3210040
Fax: 86-756-3210049

ASIA/PACIFIC

India - Bangalore
Tel: 91-80-4182-8400
Fax: 91-80-4182-8422

India - New Delhi
Tel: 91-11-4160-8631
Fax: 91-11-4160-8632

India - Pune
Tel: 91-20-2566-1512
Fax: 91-20-2566-1513

Japan - Yokohama
Tel: 81-45-471- 6166
Fax: 81-45-471-6122

Korea - Daegu
Tel: 82-53-744-4301
Fax: 82-53-744-4302

Korea - Seoul
Tel: 82-2-554-7200
Fax: 82-2-558-5932 or
82-2-558-5934

Malaysia - Kuala Lumpur
Tel: 60-3-6201-9857
Fax: 60-3-6201-9859

Malaysia - Penang
Tel: 60-4-227-8870
Fax: 60-4-227-4068

Philippines - Manila
Tel: 63-2-634-9065
Fax: 63-2-634-9069

Singapore
Tel: 65-6334-8870
Fax: 65-6334-8850

Taiwan - Hsin Chu
Tel: 886-3-572-9526
Fax: 886-3-572-6459

Taiwan - Kaohsiung
Tel: 886-7-536-4818
Fax: 886-7-536-4803

Taiwan - Taipei
Tel: 886-2-2500-6610
Fax: 886-2-2508-0102

Thailand - Bangkok
Tel: 66-2-694-1351
Fax: 66-2-694-1350

EUROPE

Austria - Wels
Tel: 43-7242-2244-39
Fax: 43-7242-2244-393

Denmark - Copenhagen
Tel: 45-4450-2828
Fax: 45-4485-2829

France - Paris
Tel: 33-1-69-53-63-20
Fax: 33-1-69-30-90-79

Germany - Munich
Tel: 49-89-627-144-0
Fax: 49-89-627-144-44

Italy - Milan
Tel: 39-0331-742611
Fax: 39-0331-466781

Netherlands - Drunen
Tel: 31-416-690399
Fax: 31-416-690340

Spain - Madrid
Tel: 34-91-708-08-90
Fax: 34-91-708-08-91

UK - Wokingham
Tel: 44-118-921-5869
Fax: 44-118-921-5820

01/02/08

© 2008 Microchip Technology Inc.